Smart Wireless Voltage Current Sensor

Product No. 1130 ±20 V and ±1 A (±1000 mA)

Product No. 1131 ±5 V and ±0.1 A (±100 mA)

Data Harvest Group Ltd.1 Eden Court, Leighton Buzzard, Beds, LU7 4FY
Tel: 01525 373666, Fax: 01525 851638
e-mail: sales@data-harvest.co.uk or support@data-harvest.co.uk
www.data-harvest.co.uk

Contents

Introduction....2
The Smart Wireless Voltage - Current sensor....2
Connecting the Voltage - Current sensor to a computer....3
Measurement procedure....4
Practical information....6
Manually calculating Resistance or Power....7
Specifications....8
Batteries....9
Updating the Firmware....9
Hard Reset....9
Investigations....10
Magnetic induction....10
Charge stored on a capacitor....12
Start-up current of a bulb....13
Limited warranty....14

Introduction

The Smart Wireless Voltage - Current sensor is both USB and Bluetooth compatible. Using Bluetooth the sensor can wirelessly connect to mobile devices such tablets and mobile phones as well as desktop or laptop computers giving students the ability to run experiments independently without being tethered to a traditional data logger. See the EasySense2 user manual system requirements for further details.

The Voltage - Current sensor is a combined voltage and current sensor in one package. It can be used to measure both electric current and the potential difference across a component in low voltage AC or DC circuits.

! SAFETY: Never use high voltages or household AC

The four 4 mm sockets (2 for Voltage and 2 for Current) allow for connection to most standard available electronics kits and school based power supplies using 4 mm plug leads (not supplied).

The sensor is supplied with a mini USB lead (1 m standard A to standard mini B).

The Smart Wireless Voltage - Current sensor

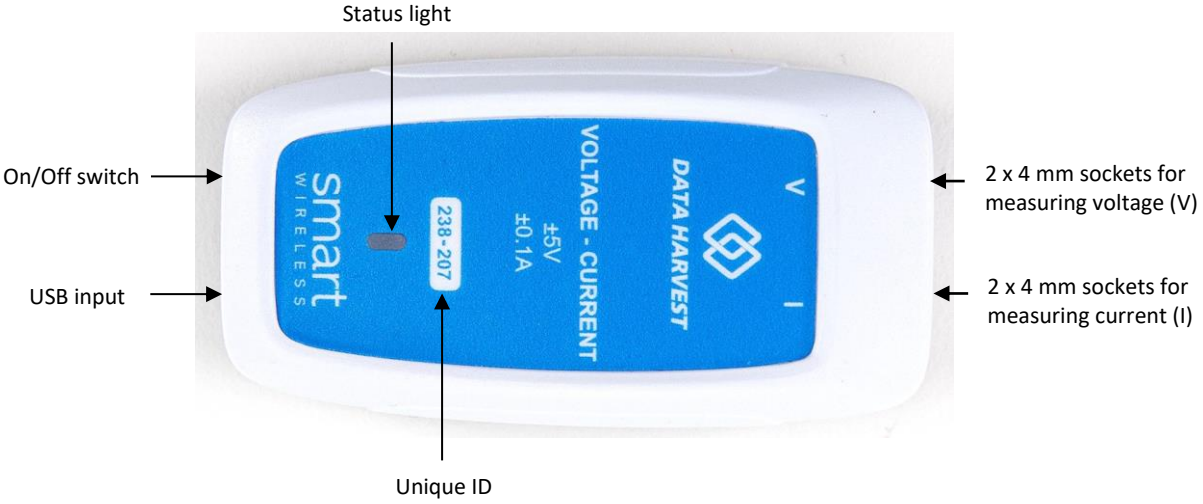

Charge the sensor fully before first use

Use the USB lead supplied to connect the sensor either direct to a USB port on your computer* or to a USB mains charger that outputs 5 V at 500 mA or more. A full charge can take up to 4 hours.

*Or a powered USB hub. Your computer should be turned on and not in sleep or standby mode or the battery may drain instead of charge.

Status Light	Indicates
No light	Sensor is Off. Short press the On/Off switch
Blue flashing	Sensor On and Bluetooth advertising
White flashing	Charging via USB mains charger or USB port
Green flashing	Communication with the EasySense2 software (via USB or Bluetooth) has been established.
Orange flashing	Recording data
Red flashing	Battery is low

To switch the sensor off: Press and hold down the On/Off switch for about 2 seconds until the white light is lit solidly then release.

If not communicating with the EasySense2 software the sensor will put itself to sleep after a period of about one hour of inactivity (blue LED flashing).

Connecting the Voltage - Current sensor to a computer

Bluetooth users: Do NOT pair devices *(if paired the sensor will not be available to the EasySense2 software). Computers or devices will need to support Bluetooth Low Energy (BLE), for further information refer to the instructions provided for the EasySense2 software.*

Install the EasySense2 software, if it is not already on your computer. For details of how to install and operate this app, please refer to the instructions provided for the EasySense2 software.

If connecting via USB:

This sensor can be used like a traditional data logger connected via USB.

Step 1: Connect the sensor to the computer's USB port using the USB cable supplied. The computer will automatically detect a new device and install the drivers. The status light on the sensor will flash white to show it is charging.

Step 2: Open the EasySense2 app.

Lab Setup will open showing the sensor as connected (Devices icon green).

The status light on the sensor will flash green to indicate a connection is established.

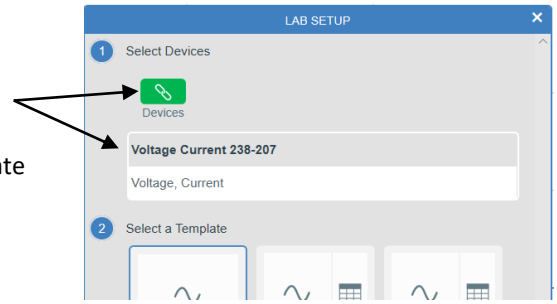

If connecting via Bluetooth:

Step 1: Short press the On switch, the blue LED will flash.

Step 2: Open the EasySense2 app.

Step 3: Lab Setup will open, select the red Devices icon.

Step 4: Select to connect to the sensor (the list will show the ID number printed on the sensor).

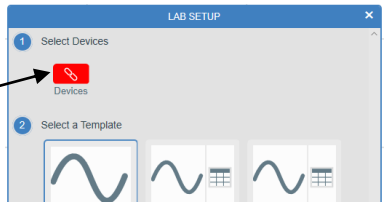

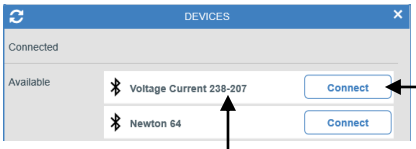

Connect

ID number

The Devices icon will change to green and the status light on the sensor will flash green to indicate a connection has been established.

Slide switches indicate that the Voltage sensor is On and the Current sensor is Off

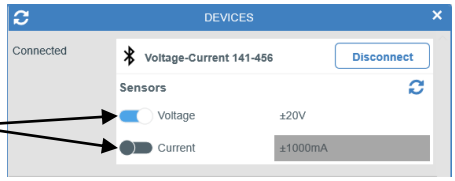

Tap or click on the slide switch to switch sensors on or off. A grey slide switch indicates the sensor is off so no readings will be taken from this sensor.

Click or tap on ☒ to close the box.

When you have finished use of the sensor select Devices and Disconnect.

To add another data logger or smart wireless sensor

Only one USB device can be connected at the same time and it will be added automatically.

For Bluetooth or Wi-Fi devices select the Devices icon (top left of screen) then the Connect button for the device from the list of those available.

Troubleshooting

If the sensor loses Bluetooth connection and will not reconnect try

- Closing and reopening the EasySense2 software.
- Close the EasySense2 software. Switch the sensor Off and then On again (**To switch off**: Press and hold down the On/Off switch for about 2 seconds until the white light is lit solidly then release. **To switch back on:** Press the On/Off switch (blue LED will flash). Reopen the EasySense2 software.
- If you are using a Bluetooth Smart USB Adaptor unplug the adaptor, plug back in again and try to reconnect.
- Hard reset the sensor and then try to reconnect, see page 9.

Measurement procedure

NOTE: This sensor is **NOT** compatible with SmartQ Voltage and Current sensors - they **cannot** be used in the same circuit at the same time.

- Connect the Voltage - Current sensor to the EasySense2 software.
- Voltage, referred to as potential difference or electromotive force (e.m.f.) is the electrical potential energy between two points in a circuit and is the driving force pushing the electricity around a circuit.

  Connect 4 mm leads from the V red and black socket in **parallel** with a component.

  Voltage is measured with respect to the negative socket and not to circuit ground, this allows connection without the constraints of common grounding.

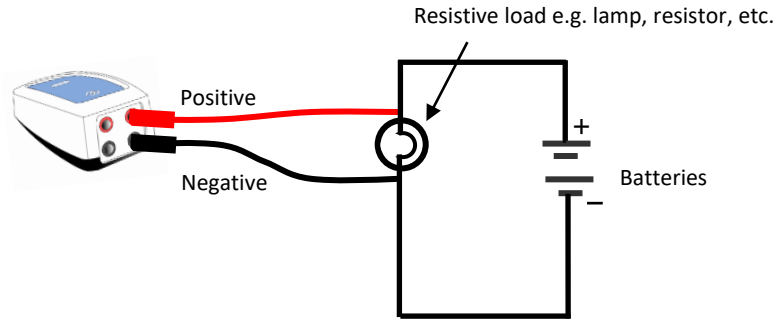

- Current is the rate of flow of electrical charge past a point per second.

  Connect 4 mm leads from the I red and black socket in **series** with the circuit component through which the current is to be measured.

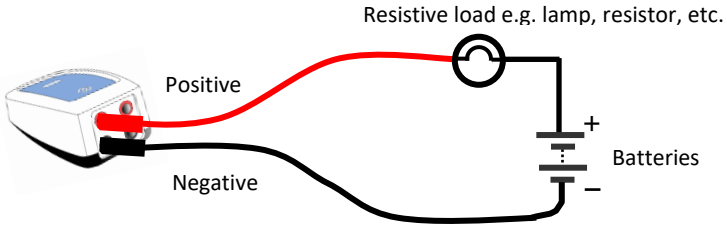

- The sensors measure from positive to negative as positive. Observe the correct polarity e.g. the lead from the black socket to the negative terminal of the cells.

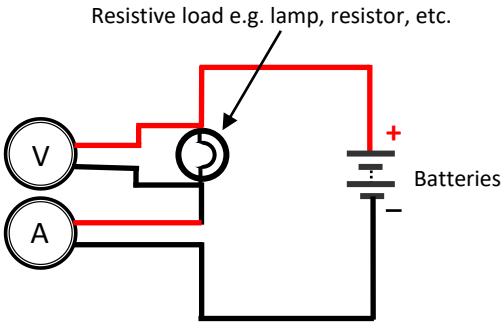

Practical information

CAUTION: Never connect a Current sensor directly across a battery or power supply without a resistance component to limit the current to within the range of the sensor. Failure to limit the current will cause permanent damage to the sensor.

- If the Voltage sensor is not part of a complete circuit, then data collected may appear 'noisy'. To measure voltage accurately you need an impedance (resistance), the Voltage sensor is a high impedance device and will pick up any electrical 'noise'.

  Note: *To demonstrate zero impedance, short out a Voltage sensor by connecting its black & red plugs together*.

- The Current sensor has a very low resistance so it will introduce as little resistance as possible to the circuit.
- An alternative to batteries is to use a fully isolated mains power supply with a regulated DC output (smoothed and fully rectified).

  Be aware that some power supplies are ½ wave rectified producing an average rather than true DC. The sensors will 'pick up' the fluctuations in voltage and current from this type of power supply.

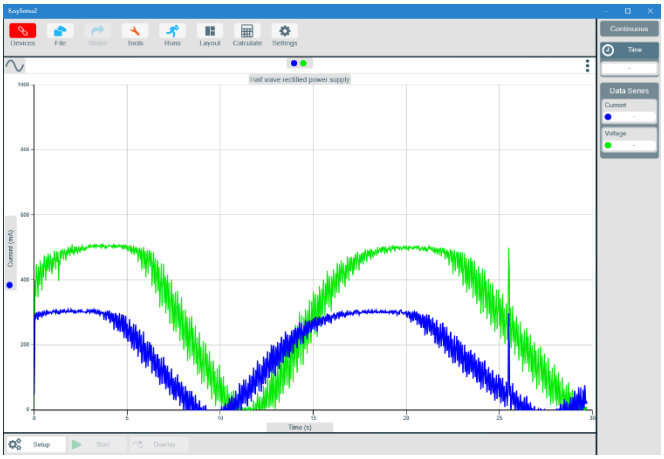

Log of the voltage and current supplied by a ½ wave rectified power unit (voltage fixed at 4.5 V)

- The suitability of components can be checked using Ohms law. Current (I) = $\frac{\text{Voltage (V)}}{\text{Resistance (R)}}$

Power source	Resistor	Current flow	The sensor most suitable
3 V	100 Ω	0.03 A (30 mA)	1131 (±100 mA)
4.5 V	100 Ω	0.045 A (45 mA)	1131 (±100 mA)
6 V	100 Ω	0.06 A (60 mA)	1130 (±1 A, ±20 V)
3 V	50 Ω	0.06 A (60 mA)	1131 (±100 mA)
4.5 V	50 Ω	0.09 A (90 mA)	1131 (±100 mA, ±5 V) or 1130 (±1A, ±20 V)
6 V	50 Ω	0.12 A (120 mA)	1130 (±1A, ±20 V)
3 V	10 Ω	0.3 A (300 mA)	1130 (±1A, ±20 V)
4.5 V	10 Ω	0.45 A (450 mA)	1130 (±1A, ±20 V)
6 V	10 Ω	0.6 A (600 mA)	1130 (±1A, ±20 V)

- When large quantities of cells are used in a circuit the current flow can cause low value resistors to become very hot (W = V x I).

  For example: A 100 Ω 3 W resistor gives good results without too much heat.
  - 6 V supply with 10 Ω resistor = 0.6 A (600 mA) current flow (Power 0.6 x 6 = 3.6 W).
  - 6 V supply with 50 Ω resistor = 0.12 A (120 mA) current flow (Power 0.12 x 6 = 0.72W).
  - 6 V supply with 100 Ω resistor = 0.06 A (60 mA) current flow (Power 0.06 x 6 = 0.36W).

- The Current sensor is protected to a voltage of ±13 V, so as long as the voltage on its inputs are below this value the sensor will not be damaged.

Product Number	**1130**	**1131**
Current range	±1000 mA	±100 mA
Voltage range	±20 V	±5 V
Maximum voltage on Voltage channel	±22 V	±22 V
Maximum current on Current channel	±5 A	±1 A
Maximum voltage on Current channel	±13 V	±13 V

- The maximum working voltage of the Current sensor is ±13 V.

  If you measure current in the return wire (i.e. the 0 V wire) the voltage will be much lower and more likely to be within safe limits.

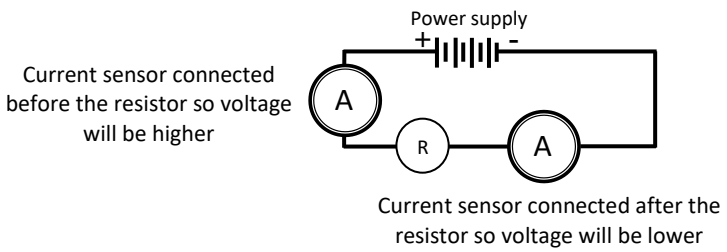

- The operating range of the sensor is 0 to 40˚C and 0 to 95% RH (non-condensing). Do not subject to extreme heat or cold. Do not expose to direct sunlight for extended periods of time.
- The sensor is not waterproof. It may be cleaned using a damp cloth. Do not immerse in water or detergent. Do not place the sensor in an environment in which high humidity levels are possible as this may result in damage or malfunction

Manually calculating Resistance or Power

Resistance and Power can be calculated from Current and Voltage data.

Resistance

$$\text{Resistance } (\Omega) = \frac{\text{Voltage (V)}}{\text{Current (I)}}$$

- Select the **Calculate** icon. 
- Select **Add Series**.
- Enter **Resistance** as the name
- Increase the number of decimals as appropriate e.g. 3
- Enter the series unit as **Ohm**.
- Select **ax/by** as the Formula.
- Enter **1** as the value for 'a', and **0.001** as value for 'b' (to convert mA readings into A).
- Select **Voltage** as the series for **x** and **Current** as the series for **y** and **Apply**.

Power

- Select the **Calculate** icon. 
- Select **Add Series**.
- Enter **Power** as the name
- Increase the number of decimals as appropriate e.g. 3
- Enter the series unit as **W**.
- Select **axy** as the Formula.
- Enter **0.001** as value for 'a' (to convert mA readings into A).
- Select **Current** as the series for **x** and **Voltage** as the series for **y** and **Apply**.

Power (W) = Voltage (V) x Current (I)

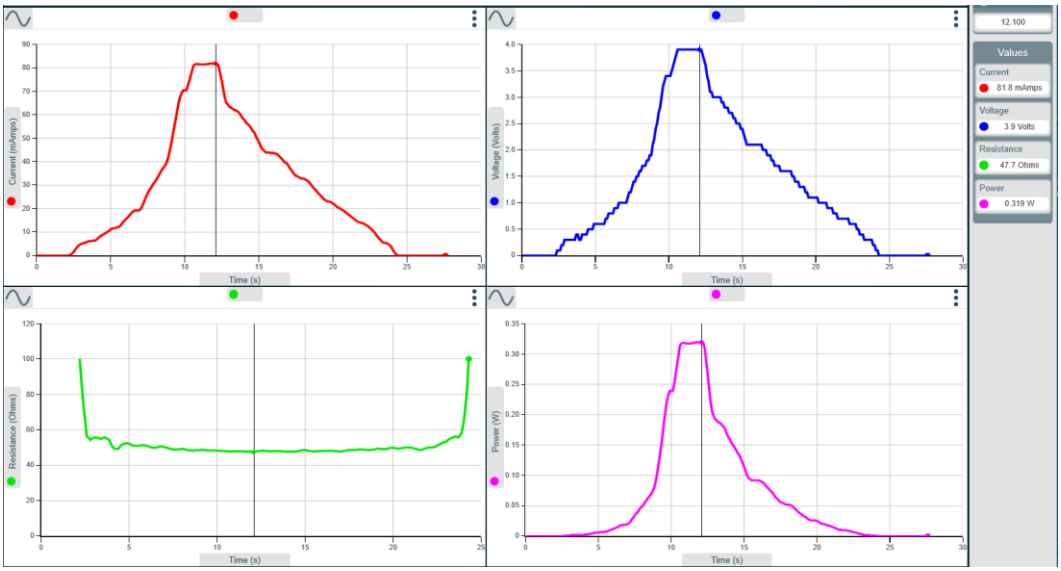

Graph showing the result from a resistance investigation using a 47 Ω resistor

Specifications

Product Number	1130	1131
Current range	±1000 mA	±100 mA
Voltage range	±20 V	±5 V
Resolution	1 mV, 1 mA	1 mV, 0.1 mA
Maximum voltage on Voltage channel	±22 V	±22 V
Maximum current on Current channel	±5 A	±1 A
Maximum voltage on Current channel	±13 V	±13 V
Resistance/impedance	0.1 Ω	1 Ω

Connectivity: USB or Bluetooth

Fastest logging speed: Bluetooth & USB = 20,000 samples per second (interval 50 µs)

Memory approx. 65 k samples, shared between the Voltage and Current channels.

Firmware upgradeable

USB communication to PC: Full speed compliant

Power specifications: 5 V at 500 mA

Battery: rechargeable internal lithium-ion 3.7 V, 1300 mAh

Operating range: 0 - 40˚C and 0 to 95% RH (non-condensing)

Weight: approx. 82 g

External dimensions: approx. height 33 mm x width 50 mm x length 92 mm

Bluetooth

Bluetooth 4.2 low energy radio, single mode compliant

Transmit (TX) power: 0 dBm

Receiver (RX) sensitivity: - 90 dBm

Usable transmission range: up to 10 m in open air

Frequency Range: 2.402 to 2.480 GHz operation

Batteries

The Voltage - Current sensor is fitted with a rechargeable lithium-ion battery. Whenever the sensor is connected to the USB port on the computer or to a USB mains charger (output 5 V at 500 mA or more), it will automatically re-charge the battery (LED status flashing white).

The sensor will stay awake for 60 mins when Bluetooth advertising (LED status flashing blue).

Once connected to the EasySense2 software (LED status flashing green) the sensor will stay awake until the battery loses charge.

To switch Off: Press and hold down the On/Off switch for about 2 seconds until the white light is lit solidly then release.

Lithium-ion batteries are 'memory-free' and prefer a partial rather than a full discharge. Constant partial discharges with frequent recharges will not cause any harm. Frequent full discharges should be avoided whenever possible. Ideally the sensor should be stored at about 40% or more charge.

The speed at which a lithium-ion battery will age is governed by both its storage temperature (preferably less than 40˚C) and state-of-charge. Eventually the battery will no longer deliver the stored energy and will need to be replaced. A fully charged battery that loses its charge quickly will demonstrate the need for replacement. When this happens, contact Data Harvest.

Updating the Firmware

Occasionally Data Harvest may release updated firmware which will contain improvements or new features. Updates will be made available from the product specific page on the Data Harvest website.

Hard Reset

If the Voltage - Current sensor fails to respond to the computer carry out a hard reset.

If necessary attach the sensor to power. Press and hold down the On/Off button for at least 8 seconds until the status LED gives a flash of blue light then release.

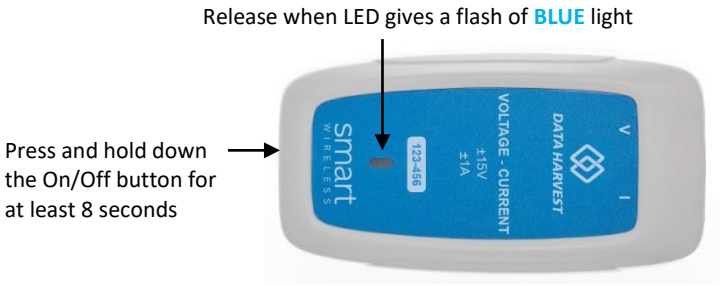

If the sensor still fails to respond contact Product Support at Data Harvest.

Please provide details of:

- The computer platform it is being used with and the EasySense2 software's version number.
- A description of the problem being encountered

If possible, telephone from a location where you can operate the sensor with the computer.

Investigations

What changes the current in a circuit?	*Dynamo effect*
Series and parallel circuits	*Start-up current of a lamp*
Ohm's law	*Capacitor discharge, charge and energy stored*
Good and bad conductors	*Specific Heat Capacity for a liquid or solid*
Alternative power investigations e.g. solar cells, water power, wind energy, etc.	*Calibration of a thermometer*
Connecting resistors together	*Diodes: A.C. diode rectification*
Fuses	*Resonance in a series LCR circuit*
Long wires, less power?	*Impedance change with frequency increase*
Electrical component characteristics	*Efficiency of an electric motor / generator*
Faraday's induction of current or voltage in a coil	*Reactance and phase in a capacitor*

Magnetic induction

This investigation measures the voltage induced by a magnet falling through a wire coil.

If voltage is recorded than either the 1130 ±20V or 1131 ±5V sensors would be suitable. If current is recorded then the 1131 ±100 mA sensor would be the better choice.

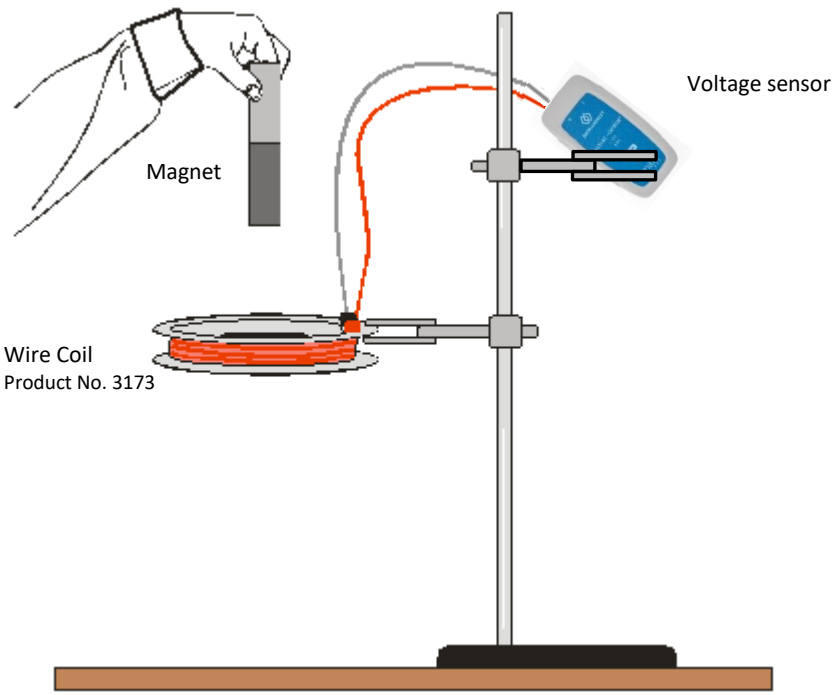

1. Assemble the apparatus as shown. Open EasySense2 and select the **Voltage - Current** sensor as the device. Deselect the Current sensor.
2. Select Setup and the options for recording the data. For example:

Mode	Continuous	Continuous
Interval between samples	**500 us**	**1 ms**
Start	Value Rises Above	Value Rises Above
Trigger channel	Voltage	Voltage
Trigger value	0.04 V	0.04 V
Pretrigger time	500 ms	1 s
Stop	After duration	After duration
Duration	1 s	2 s

3. Tap or click on **Start** to begin. Mark one end of the magnet and drop this end through the coil.
4. Select **Overlay** and drop the other end of the magnet through the coil.

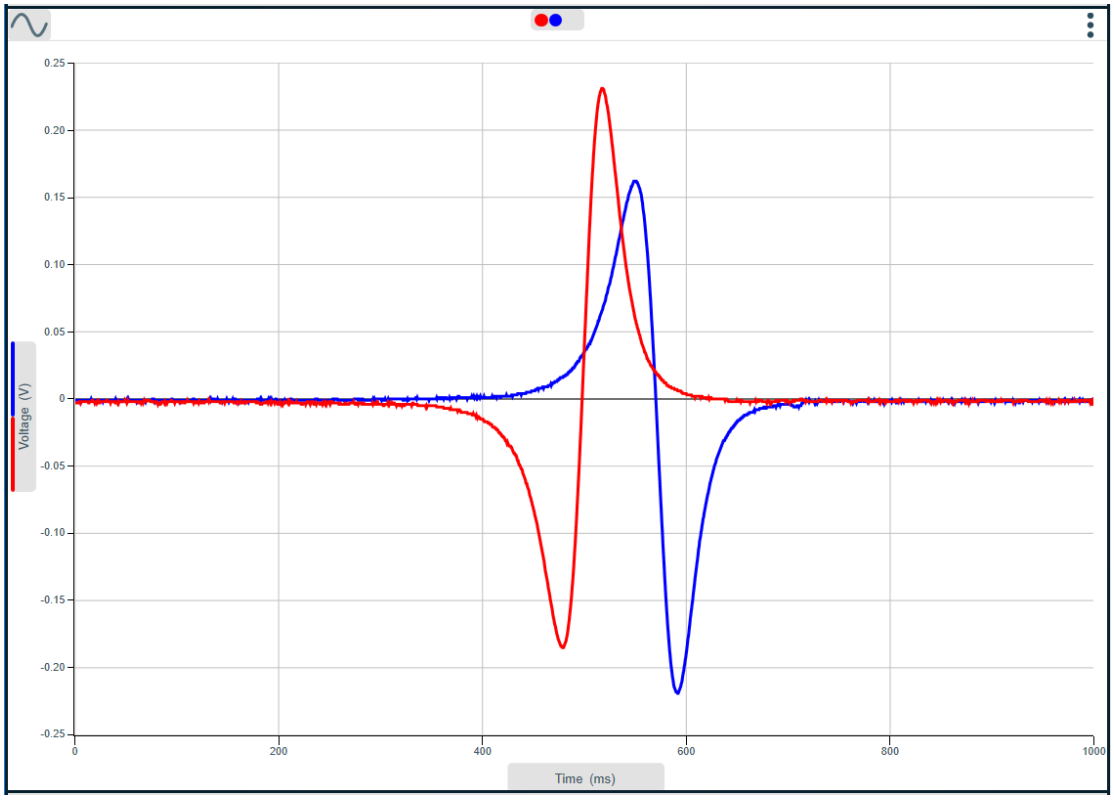

In this graph data was collected with a 500 µs interval, rises above 0.04 V with a pre-trigger time of 500 ms, stop after 1 s with the magnet dropped twice (different end each time), data auto scaled

Notes:

- A suitable trigger value for the Current sensor in the same setup is likely to be about 4 mA.
- If you are using your own wire coil connect a 0.01µf ceramic capacitor across the coil terminals to reduce e.m.f. noise.

Charge stored on a capacitor

Measuring the charge that a capacitor can store and then deliver when discharged. Current values are likely to be low so the 1131 ±100 mA sensor is the better choice for this investigation.

Note: *To select the appropriate capacitor and resistor, use the formula T = CR, where T = time in seconds, C = capacitor value in farads, R = resistor value in ohms.*

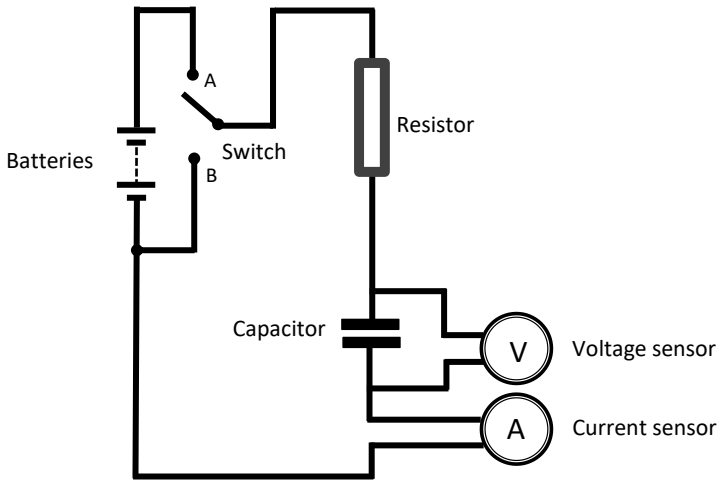

1. Assemble the apparatus as shown with the switch open. Use the largest value resistor first. Open EasySense2 and select the **Voltage - Current** sensor as the device.
2. Select **Setup**, Continuous mode, with an Interval of 20 ms. To ensure logging starts at the same value each time enter a trigger to start condition e.g. Voltage value rises above 0.3 V.
3. Put the switch in the discharge position (B) and short out the capacitor (e.g. connect a piece of wire across the terminals of the capacitor) so it is fully discharged.
4. Select **Start**. Put the switch in the charge position (A) to fully charge the capacitor (until the voltage stops rising).
5. Swap the switch to discharge the capacitor. Stop logging when the voltage reaches zero. Make a note of the maximum value the voltage reached.
6. Change the resistor to a different size. Select **Overlay** and repeat (charge to the same voltage level as in step 5).

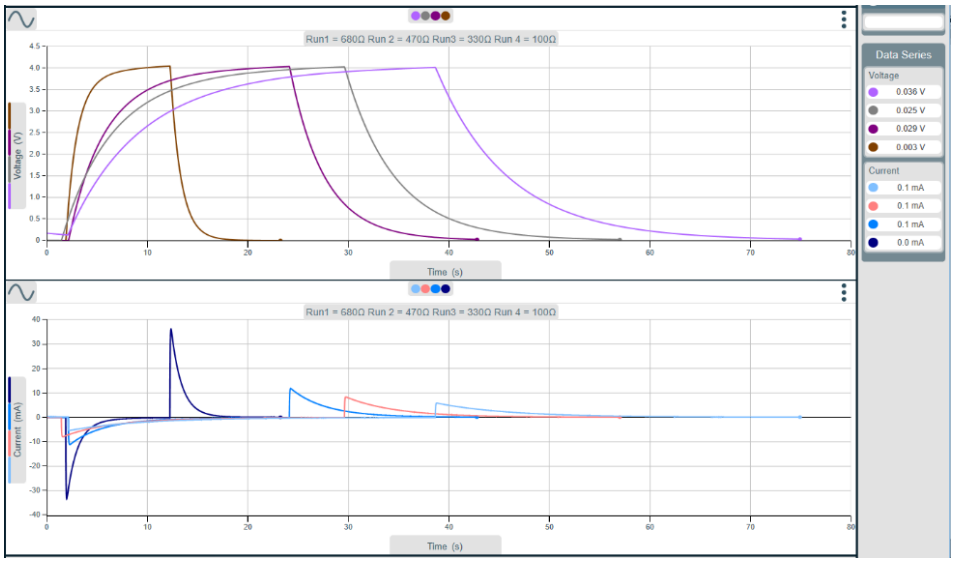

In this example a 10,000 µF capacitor was used with a 680, 470, 330, & 100 Ω resistor, data auto scaled

Start-up current of a bulb

As the current may exceed 100 mA the 1130 ±20 V ±1 A sensor is likely to be the better choice.

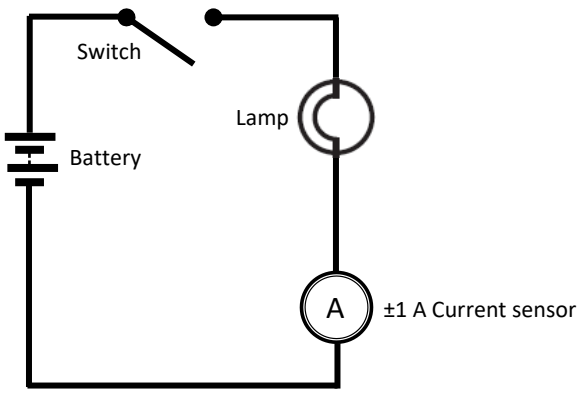

1. Set up the apparatus and leave the switch open.

2. Open the EasySense program. Select Setup and the options for recording the data (see table for suggestions).

Mode	Continuous	Continuous
Interval	100 us	500 us
Start	Value Rises Above	Value Rises Above
Channel & value	Current 30 mA	Current 30 mA
Pretrigger time (about 25% of duration)	50 ms	200 ms
Stop	After duration	After duration
Duration	200 ms	500 ms

3. Select **Start**. Close the switch to complete the circuit. Open the switch when the recording has finished

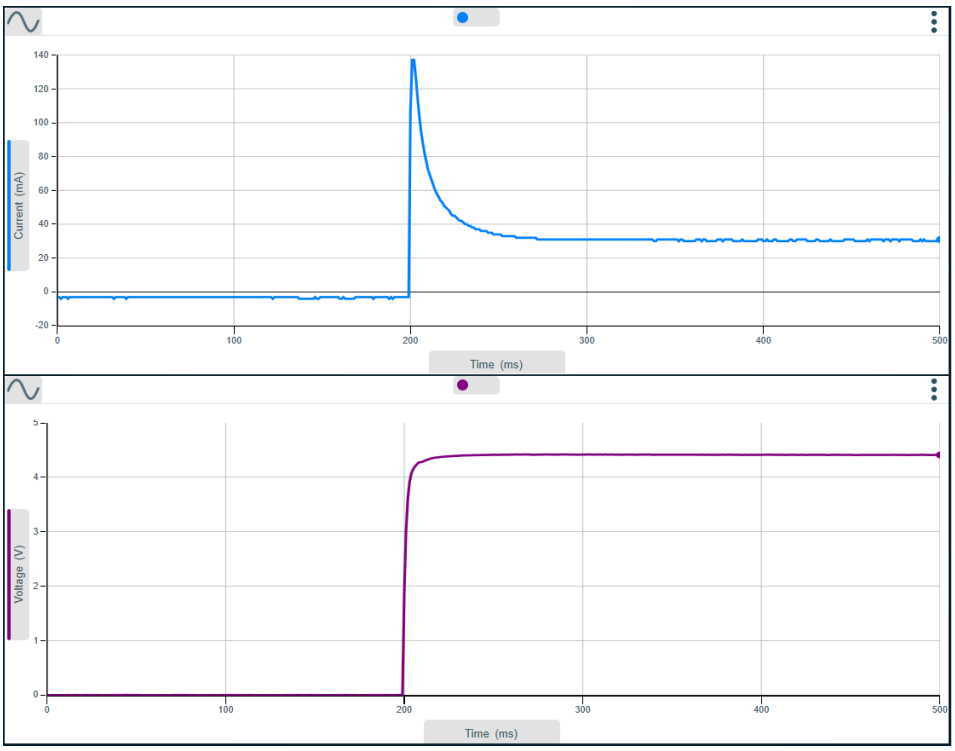

A 4.5 V battery and 6 V bulb, interval 500 µs, trigger when the Current sensor rises above 30 mA with a 200 ms (20%) pre-trigger, duration 500 ms, both Current and Voltage recorded, data auto scaled

Limited warranty

For information about the terms of the product warranty, see the Data Harvest website at: https://data-harvest.co.uk/warranty.

Note: Data Harvest products are designed for **educational** use and are not intended for use in industrial, medical or commercial applications.

WEEE (**W**aste **E**lectrical and **E**lectronic **E**quipment) Legislation

Data Harvest Group Ltd is fully compliant with WEEE legislation and is pleased to provide a disposal service for any of our products when their life expires. Simply return them to us clearly identified as 'life expired' and we will dispose of them for you.

FCC Details

This device complies with Part 15 of the FCC Rules. Operation is subject to the following two conditions: (1) this device may not cause harmful interference, and (2) this device must accept any interference received, including interference that may cause undesired operation.