KF ~

(I) 1-2 MANUALE D'USO - FABBRICATORI DI GHIACCIO GRANULARE

(F) 3-4 MODE D'EMPLOI - MACHINE A GLACE EN PAILLETTES

(GB) 5-6 USER MANUAL - FLAKE ICE MACHINE

(E) 7-8 INDICACIONES PARA EL USO - FABRICADORA DE HIELO GRANULAR

(P) 9-10 MANUAL DE USO - FABRICADORES DE GELO EM GRANULAR

(D) 11-12 GEBRAUCHSANWEISUNG - EISFLOCKENBEREITER

(NL) 13-14 GEBRUIKSHANDLEIDING - GEGRANULEERD IJSMAKER

(DK) 15-16 BRUGERMANUAL - MASKINER TIL GRANULEREDE ISFLAGER

(S) 17-18 BRUKSANVISNING - ISKROSSMASKIN

(N) 19-20 BRUKSANVISNING - MASKINER TIL ISGRANULAT

(FIN) 21-22 JÄÄPALAKONEEN KÄYTTÖ - JÄÄRAKEIDEN TUOTANTOLAITE

(GR) 23-24 ΕΓΧΕΙΡΔΙΟ ΧΡΗΣΕΩΣ - ΚΟΚΚΩΔΕΣ

03/09

GB INSTALLATION

230 V ~ single phase

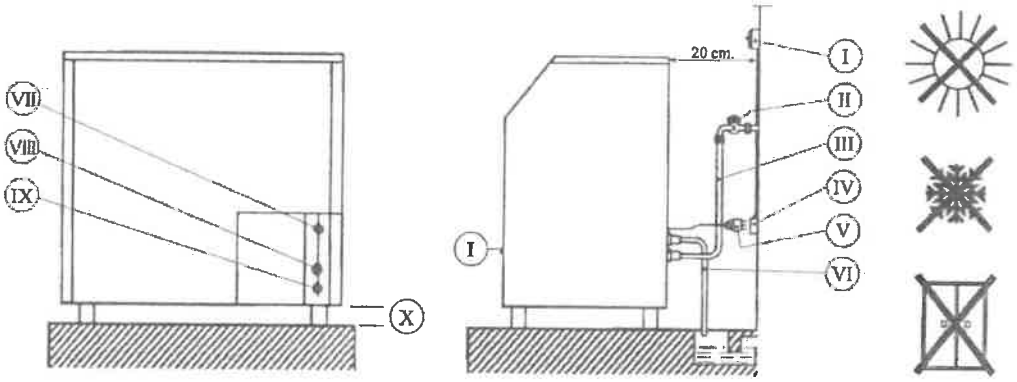

800/950/1750
1000/1600/1200/2500 **400V ~ threephase N**

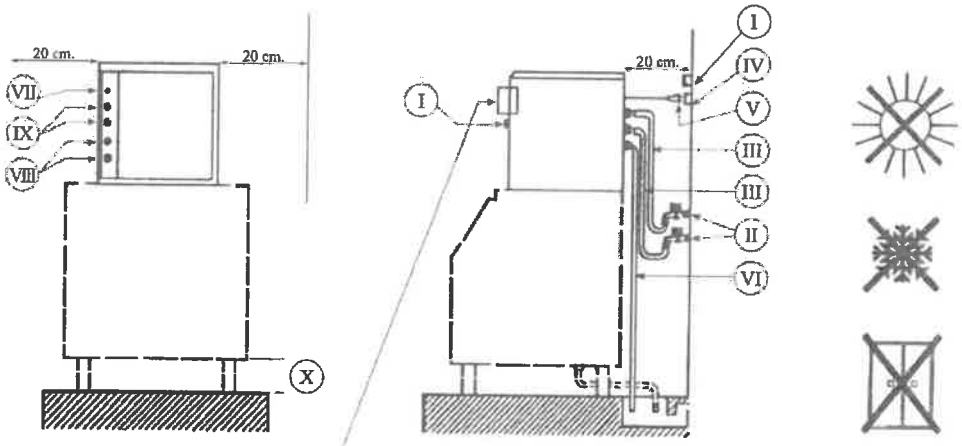

⊗ Bin	Bin full - Stopped by the electric-photo cells	⊗ Water	Water - Without water for 1 minute (Level feeler)	⊗ Service	Service - Call authorized service (LED electronic board)

I) Main switch
II) Water tap
III) Water inlet pipe
IV) Earthed socket
V) Earthed plug
VI) Water waste pipe
VII) Electric supply cable L = 1800
VIII) Water waste ø ¾"
IX) Water inlet ø ¾"
X) Adjustable feet mm 120 / mm 140

GB USER MANUAL - FLAKE ICE MACHINE

Many thanks for selecting our product and we wish you a long and problem free use for many years. In every complain or communication about the ice machine with the manufacturer or the distributor indicate the model and serial number.

CAUTION: HANDLE CAREFULLY TO AVOID DAMAGE TO THE REFRIGERATING CIRCUIT
CAUTION: FOR INSTALLATION IN A KITCHEN, ADD THE EQUIPOTENTIAL EARTH SYSTEM
CAUTION: DURING OPERATION OF THE ICE MACHINE, PAY ATTENTION TO THE MOVING MECHANICAL PARTS

CHECK AT DELIVERY

1) The packing of damages.
2) The delivered ice machine with the purchase order.
3) The ice machine is not damaged during transport and no parts are missing.

In case of damages or missing parts, report immediately to the delivering carrier or your supplier.

INSTALLATION PROCEDURE

1) Carefully read all the applicable national regulations for connection to the water supply network.
2) The ice machine is not suitable for outdoor use.
3) The ice machine is not suitable for installation in areas where jets of water may be used.
4) The ice machine must be installed only in places where operation and maintenance are performed by qualified personnel.
5) Only persons with knowledge and practical experience of the ice machine, in particular as regards safety and hygiene standards, should be allowed access to the service area.
6) The ice machine is not designed for use by persons (including children) with reduced physical, sensorial or mental capacity, or with no experience or knowledge, unless they are supervised or instructed in use of the equipment by a person responsible for their safety.
7) The weighted sound pressure level "A" is below 70 dB.
8) Remove the ice machine from its packing and place it in the desired position, ensuring that it is perfectly horizontal (feet are adjustable) and well away from heat sources. Also the ambient must be ventilated.
9) Air inlets and outlets should be kept at least **20 cm** from walls.
10) Ambient temperature must not be lower than **5°C** or higher than **35°C** for a satisfactory yield and to prevent freezing.
11) Power supply must be **230 V** single phase - **(800/950/1000/1200/1600/1750/2500 400 V** threephase N). The maximum voltage variation permitted is **±6%**. It is advisable to protect the main switch by means of a fuse.
12) An earth terminal is essential.
13) Drink water supply pressure must not be less than **1 bar (kPa)** and not higher than **6 bar (600 kPa)**. Water temperature must be between **5°C** and **20°C** for a satisfactory yield.
14) Drink water is supplied through a flexible hose (provided with the machine) which should be connected to the water mains by means of its **3/4"** BSP threaded connection. Only with drink water. When replacing the pipe, the gaskets should also be replaced.
15) The drain pipe must have a drop of at least **15%**. If the drain is far from the ice machine use a larger diameter hose, ensuring that it is not twisted or kinked at any point. Note, use an open vented drain.
16) If the power supply cable is damaged, it must be replaced by the manufacturer or its technical support service or in any case by a person with a similar qualification, in order to prevent all risks.

ATTENTION: HIGH TEMPERATURES, WATER OR/AND AMBIENT, AND WATER WITH HIGH CONTENCE OF MINERALS CAN CAUSE WET ICE.

STARTING UP

After checking all the previous points:
1) Turn the water supply tap on.
2) Place the plug in the power socket with main switch. If the unit is only equipped with an electrical cord for power supply, the authorized service company must connect the lead wires to an electrical plug that corresponds to the local electrical requirements or to a separate two poles disconnect switch with opening between the contacts of minimum 3 millimeters, very close to the ice machine to be reached easily and promptly.
3) Turn on the main switch. The self-contained machines start immediately and the modular machines will start only after approximately 4 minutes (temporized by the electronic board).
4) After stopping the machine operation by the main switch, wait at least 5 minutes before re-starting it again.

OPERATION

The cycle starts with the production phase, the compressor, the electric fan, the motor, the gearbox, the endless screw and the water inlet are in operation. The machine is now in the production phase. The water supplied to the machine passes through the float tank (fixing the water level) and floods the inside of the evaporator where it is transformed into ice. The endless screw conveys the ice to the upper part where it is taken into the storage bin. The machine is producing continously until the storage bin is filled up with ice. Now the self-contained machine stops by the bin thermostat automatically. After ice is taken out the machine starts with the production cycle again by the bin thermostat automatically. The modular machine stops and starts by the electric-photo cells fixed in the ice outlet.

CAUTION: ICE IS FOR HUMAN CONSUMPTION,WASH YOUR HANDS BEFORE HANDLING, KEEP MACHINE BIN LID CLOSED AND ENSURE REGULAR CLEANING OF ALL UTENSILS AND PARTS IN CONTACT WITH THE ICE.

MAINTENANCE AND CLEANING BY THE USER - DISCONNECTING POWER AND WATER SUPPLY.

1) The ice machine cannot be cleaned with a jet of water.
2) Clean the ice storage bin, using a detergent diluted in warm water and rinse it with warm water.
3) Clean the bodywork with a soft damp cloth with a specific product.

ROUTINE MAINTENANCE (EVERY 6 MONTHS) - AUTHORIZED SERVICE ONLY

1) Clean the solenoid valve filter.
2) Clean the condenser wins with a soft brush each month.
3) Clean the ice production system and the storage bin.
4) In the event of lengthy idle periods clean all the parts of the ice machine.

This appliance conforms to EEC Directive EEC 2006/95 - EEC 2006/42 and EEC 2004/108 on radiointerference.

I

I) Interruttore
II) Termostato evaporatore
III) Termostato contenitore
IV) Interruttore di sicurezza 1.5 A (RESET 35/45/75/85/125/145/165/185)
V) Pressostato
VI) Contattore
VII) Scheda elettronica

P

I) Interruptor
II) Termostato do evaporador
III) Termostato do recipiente
IV) Interruptor de segurança de 1,5 A (REARME Reset 35/45/75/85/125/145/165/185)
V) Pressostato
VI) Contactor
VII) Ficha electrónica

S

I) Manöverbrytare
II) Förångartertermostaten
III) Bingtermostaten
IV) Säkerhetsbrytare 1,5 A (RESET 35/45/75/85/125/145/165/185)
V) Tryckvakt
VI) Kontaktor
VII) Elektroniskt kort

F

I) Interrupteur
II) Thermostat de evaporateur
III) Thermostat de bac
IV) Interrupteur de sécurité 1,5 A (RESTAURATION 35/45/75/85/125/145/165/185)
V) Pressostat
VI) Compteur
VII) Carte électronique

D

I) Schalter EIN/AUS
II) Verdampferthermostat
III) Behälterthermostat
IV) Sicherheitsschalter 1.5 A (RESET 35/45/75/85/125/145/165/185)
V) Druckwächter
VI) Kontakt
VII) Elektronische Platine

N

I) Bryteren
II) Fordamperens termostat
III) Beholderen termostat
IV) Sikkerhetsbryter 1,5 A (TILBAKESTILLING 35/45/75/85/125/145/165/185)
V) Trykkbryter
VI) Kontaktor
VII) Elektronisk kort

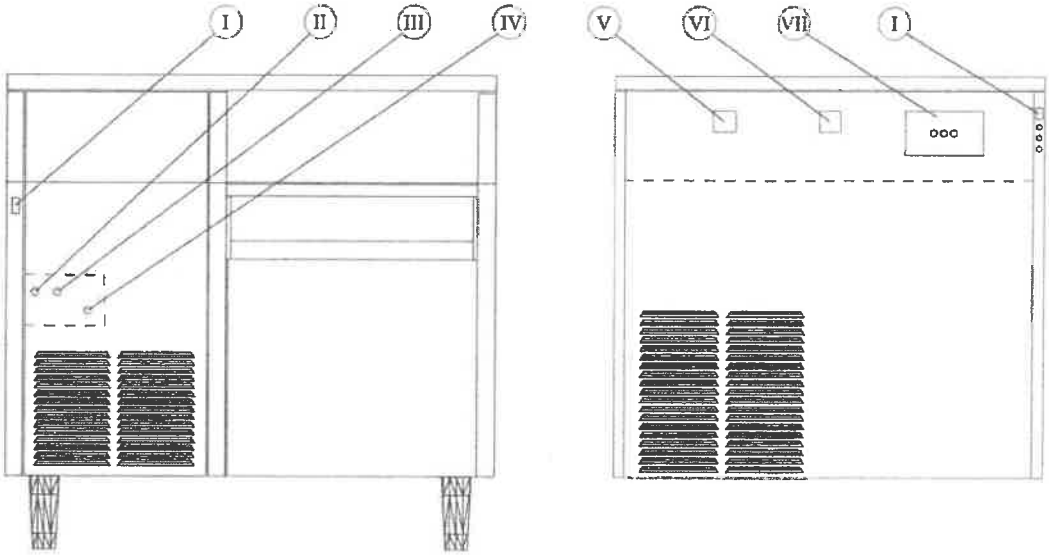

GB

I) Main switch
II) Evaporator thermostat
III) Bin thermostat
IV) Saftey switch 1.5 A (Reset 35/45/75/85/125/145/165/185)
V) Pressure switch
VI) Contactor:
VII) Electronic board

NL

I) Schakelaar
II) Verdamperthermostat
III) Bakthermostaat
IV) Veiligheidsschakelaar 1,5 A (RESET 35/45/75/85/125/145/165/185)
V) Drukschakelaar
VI) Contactschakelaar
VII) Stuurkaart

FIN

I) Pääkytkin
II) Höyrystintermostaatti
III) Säiliötermostaatti
IV) Suojakatkaisin 1,5 A (NOLLAUS 35/45/75/85/125/145/165/185)
V) Painekatkaisin
VI) Kontaktori
VII) Elektroninen kortti

E

I) Interruptor
II) Termostato evaporador
III) Termostato contenedor
IV) Interruptor de seguridad 1,5 A (RESET 35/45/75/85/125/145/165/185)
V) Presóstato
VI) Contador
VII) Ficha electrónica

DK

I) Afbryderen
II) Fordamperens termostat
III) Beholderens termostat
IV) Sikkerhedsafbryder - 1,5 A (RESET 35/45/75/85/125/145/165/185)
V) Trykafbryder
VI) Kontaktor
VII) Elektronisk kort

GR

I) Κυρίως διακόπτης
II) Θερμοστάτης στοιχείου
III) Θερμοστάτης κάδου
IV) Διακόπτης ασφαλείας 1.5 A (ΑΠΟΚΑΤΑΣΤΑΣΗ 35/45/75/85/125/145/165/185)
V) Πρεσοστάτης
VI) Μετρητής
VII) Ηλεκτρονική κάρτα

I

I) Entrata acqua
II) Vaschetta acqua con galleggiante
III) Evaporatore
IV) Tubo caduta ghiaccio
V) Riduttore
VI) Puleggia
VII) Cinghia
VIII) Motore

NL

I) Wateringang
II) Waterbakje met vlotter
III) Verdamper
IV) IJsvalleiding
V) Reductor
VI) Poelie
VII) Riem
VIII) Motor

N

I) Vanninngang
II) Vanntank med flyter
III) Fordamper
VI) Slange for utslipp av is
V) Reduksjonsgir
VI) Remskive
VII) Rem
VIII) Motor

F

I) Entrée eau
II) Bac eau avec flotteur
III) Evaporateur
IV) Tuyau descente glace
V) Réducteur
VI) Poulie
VII) Courroie
VIII) Moteur

GB

I) Water inlet
II) Float tank
III) Evaporator
IV) Ice outlet
V) Gearbox
VI) Pully
VII) Belt
VIII) Motor

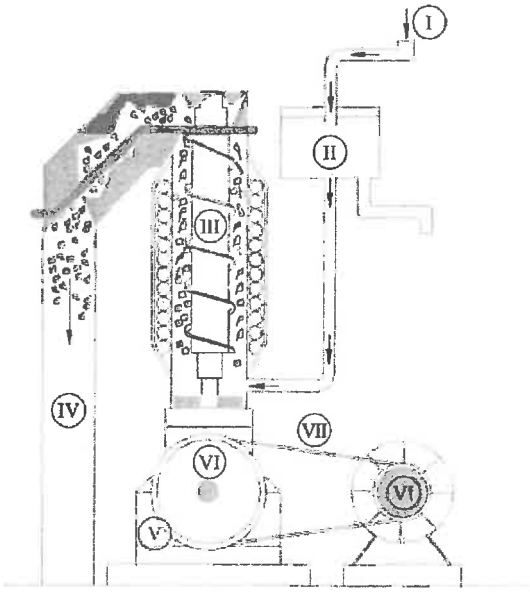

E

I) Entrada agua
II) Tanque de agua con flotador
III) Evaporador
IV) Tubos de descarga del hielo
V) Reductor
VI) Polea
VII) Correa
VIII) Motor

P

I) Entrada de água
II) Depósito de água com flutuador
III) Evaporador
IV) Tubo de caída do gelo
V) Redutor
VI) Polia
VII) Correia
VIII) Motor

DK

I) Vandindtag
II) Vandkar med flyder
III) Fordamper
VI) Rør, hvor isen falder ned
V) Reduktionsgear
VI) Remskive
VII) Rem
VIII) Motor

FIN

I) Veden sisääntulo
II) Vesisäiliö, jossa on uimuri
III) Haihdutin
VI) Jään antoputki
V) Alennusvaihde
VI) Hihnapyörä
VII) Hihna
VIII) Moottori

D

I) Wassereinlaß
II) Niveauwanne
III) Verdampfer
IV) Ausfallschacht
V) Getriebe
VI) Keilriemenscheibe
VII) Keilriemen
VIII) Motor

S

I) Vatteninlopp
II) Vattenskål med flottör
III) Förångare
VI) Nedfallsränna för is
V) Reducerväxel
VI) Remskiva
VII) Drivrem
VIII) Motor

GR

I) Εἰσοδος νερού
II) Δεξαμενή νερού με πλωτήρα
III) Εξατμιστήρας
VI) Σωλήνας πτώσεως πάγου
V) Μειωτήρας
VI) Τροχαλία
VII) Ιμάντας
VIII) Κινητήρας

(I) SCHEDA ELETTRONICA
SEGNALE SERVICE ACCESO - USARE INTERRUTTORE GENERALE PER IL RESET DEL FABBRICATORE

A - LED: Eccessiva temperatura condensazione (72°C)
B - LED: Eccessivo assorbimento motore (180/250 max. 2A - 400/500/800/1000/1600/2500 max. 4A)
C - LED: Mancanza produzione ghiaccio (fotocellule non vedono cadere ghiaccio 6 minuti)
D - POTENZIOMETRO:

180/250	= 2 A
200/300	= 2 A
400/450/500	= 4 A
600/800/950	= 4 A
1200/1750/2500	= 4 A

(F) CARTE ELECTRONIQUE
SIGNAL SERVICE ALLUME - SE SERVIR DE L'INTERRUPTEUR GENERAL POUR RESTAURER LE FABRICATEUR

A - LED: Température de condensation excessive (72 °C)
B - LED: Absorption moteur excessive (180/250 max 2A - 400/500/800/1000/1600/2500 max. 2A)
C - LED: Absence de production de glace (les photocellules ne voient pas descendre la glace 6 minutes)
D - POTENTIOMETRE:

180/250	= 2 A
200/300	= 2 A
400/450/500	= 4 A
600/800/950	= 4 A
1200/1750/2500	= 4 A

(GB) ELECTRONIC BOARD
SIGNAL SERVICE ON - USE MAINSWITCH FOR RESET OF MACHINE

A - LED: High condensing temperature (72°C)
B - LED: High amperage motor (180/250 max. 2A - 400/500/800/1000/1600/2500 max. 4A)
C - LED: No ice production (electric-photo cells not interrupted 6 minutes)
D - AMPERAGE:

180/250	= 2 A
200/300	= 2 A
400/450/500	= 4 A
600/800/950	= 4 A
1200/1750/2500	= 4 A

(NL) STUURKAART
SIGNAAL SERVICE AAN - GEBRUIK DE HOOFDSCHAKELAAR VOOR RESET VAN DE IJSMAKER

A - LED: te hoge condensatietemperatuur (72°C)
B - LED: te grote stroomopname door motor (180/250 max. 2A - 400/500/800/1000/1600/2500 max. 4A)
C - LED: geen ijsproductie (de fotocellen zien 6 minuten lang geen ijs vallen).
D - POTENTIOMETER:

180/250	= 2 A
200/300	= 2 A
400/450/500	= 4 A
600/800/950	= 4 A
1200/1750/2500	= 4 A

(DK) ELEKTRONISK KORT
SIGNAL FOR SERVICE TÆNDT - BENYT HOVEDAFBRYDEREN TIL TILBAGESTILLING AF MASKINEN TIL FREMSTILLING AF IS

A - LED: Kondensationstemperatur for høj (72° C)
B - LED: Motorens strømforbrug for højt (180/250: maks. 2 A - 400/500/800/1000/1600/2500: maks. 4 A)
C - LED: Manglende fremstilling af is (i 6 min. har fotocellerne ikke registreret, at isen er faldet ned).
D - POTENTIOMETER:

180/250	= 2 A
200/300	= 2 A
400/450/500	= 4 A
600/800/950	= 4 A
1200/1750/2500	= 4 A

(S) ELEKTRONISKT KORT
TÄND SERVICESIGNAL - ANVÄND HUVUDSTRÖMBRYTAREN FÖR ÅTERSTÄLLNING AV MASKINEN

A - LYSDIOD: Hög kondensationstemperatur (72 °C)
B - LYSDIOD: Hög motorförbrukning (180/250 max. 2 A - 400/500/800/1000/1600/2500 max. 4 A)
C - LYSDIOD: Utebliven isproduktion (fotocellerna har inte aktiverats av nedfallande is på 6 minuter)
D - POTENTIOMETER:

180/250	= 2 A
200/300	= 2 A
400/450/500	= 4 A
600/800/950	= 4 A
1200/1750/2500	= 4 A

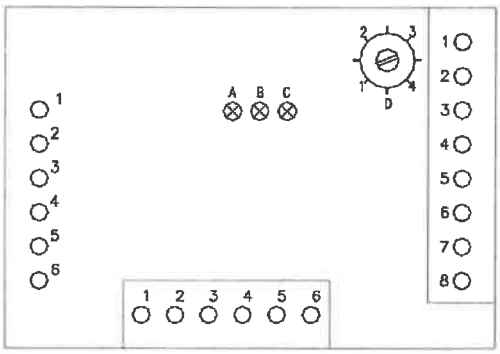

(E) FICHA ELECTRÓNICA
SEÑAL DE SERVICIO ENCENDIDA - USAR INTERRUPTOR GENERAL PARA LA REACTIVACIÓN DEL GENERADOR DE HIELO

A -LED: Temperatura de condensación excesiva (72°C)
B -LED: Consumo del motor excesivo (180/250 máx. 2A - 400/500/800/1000/1600/2500 máx. 4A)
C -LED: Falta de producción de hielo (células fotoeléctricas no ven caer el hielo 6 minutos)
D - POTENCIOMETRO:

180/250	= 2 A
200/300	= 2 A
400/450/500	= 4 A
600/800/950	= 4 A
1200/1750/2500	= 4 A

(P) FICHA ELECTRÓNICA
SINAL DE SERVICE ACESO - USAR O INTERRUPTOR GERAL PARA O REARME (Reset) DO FABRICADOR DE GELO

A - LED: Temperatura excessiva de condensação (72 °C)
B - LED: Absorção excessiva do motor (180/250 máx. - 2A - 400/500/800/1000/1600/2500 máx. - 4A)
C - LED: Ausência de produção de gelo (as células fotoeléctricas não vêem cair gelo por 6 minutos)
D - POTENCIOMETRO:

180/250	= 2 A
200/300	= 2 A
400/450/500	= 4 A
600/800/950	= 4 A
1200/1750/2500	= 4 A

(D) ELEKTRONISCHE PLATINE
SIGNAL SERVICE AN - HAUPTSCHALTER FÜR DEN RESET DES GERÄTES BENUTZEN

A - LED: Verflüssigertemperatur zu hoch (72°C)
B - LED: Motor Amper (180/250 max. 2A- 400/500/800/1000/1600/2500 max. 4A)
C - LED: Keine Eisproduktion (Lichtschranke wird 6 Minuten nicht unterbrochen)
D - POTENTIOMETER:

180/250	= 2 A
200/300	= 2 A
400/450/500	= 4 A
600/800/950	= 4 A
1200/1750/2500	= 4 A

(N) ELEKTRONISK KORT
TENT SIGNAL FOR SERVICE - BRUK HOVEDBRYTEREN FOR Å TILBAKESTILLE MASKINEN

A - LED: For høy kondenseringstemperatur (72°C)
B - LED: For høy motorforbruk (180/250 maks. 2 A - 400/500/800/1000/1600/2500 maks. 4 A)
C - LED: Mangel på produksjon av is (fotocellene ser ikke at is har falt ned de siste 6 minuttene)
D - POTENSIOMETER:

180/250	= 2 A
200/300	= 2 A
400/450/500	= 4 A
600/800/950	= 4 A
1200/1750/2500	= 4 A

(FIN) ELEKTRONINEN KORTTI
HUOLTOSIGNAALI PÄÄLLÄ - KÄYTÄ PÄÄKATKAISINTA LAITTEEN NOLLAUKSEEN

A - LED: liian korkea tiivistymislämpötila (72°C)
B - LED: moottorin liian korkea kulutus (180/250 maks. 2 A - 400/500/800/1000/1600/2500 maks. 4 A)
C - LED: jään tuotannon puuttuminen (valokennot eivät havaitse jään putoamista 6 minuuttiin)
D - POTENTIOMETRI:

180/250	= 2 A
200/300	= 2 A
400/450/500	= 4 A
600/800/950	= 4 A
1200/1750/2500	= 4 A

(GR) ΗΛΕΚΤΡΟΝΙΚΗ ΚΑΡΤΑ ΣΗΜΑ ΣΕΡΒΙΣ ΑΝΑΜΜΕΝΟ – ΧΡΗΣΙΜΟΠΟΙΗΣΤΕ ΤΟΝ ΓΕΝΙΚΟ ΔΙΑΚΟΠΤΗ ΓΙΑ ΤΗΝ ΑΠΟΚΑΤΑΣΤΑΣΗ ΤΟΥ ΠΑΡΑΣΚΕΥΑΣΤΗ

A-LED: Υπερβολική θερμοκρασία συμπύκνωσης (72° C).
B-LED: Υπερβολική απορρόφηση κινητήρα (180/250 max 2A - 400/500/800/1000/1600/2500 max 4A)
C-LED: Έλλειψη παραγωγής πάγου (φωτοκύτταρα δεν βλέπουν να πέφτει πάγος επί 6 λεπτά)
D-Ποτενσιόμετρο:

180/250	= 2 A
200/300	= 2 A
400/450/500	= 4 A
600/800/950	= 4 A
1200/1750/2500	= 4 A

Mod. 45
35

FUNZIONALE

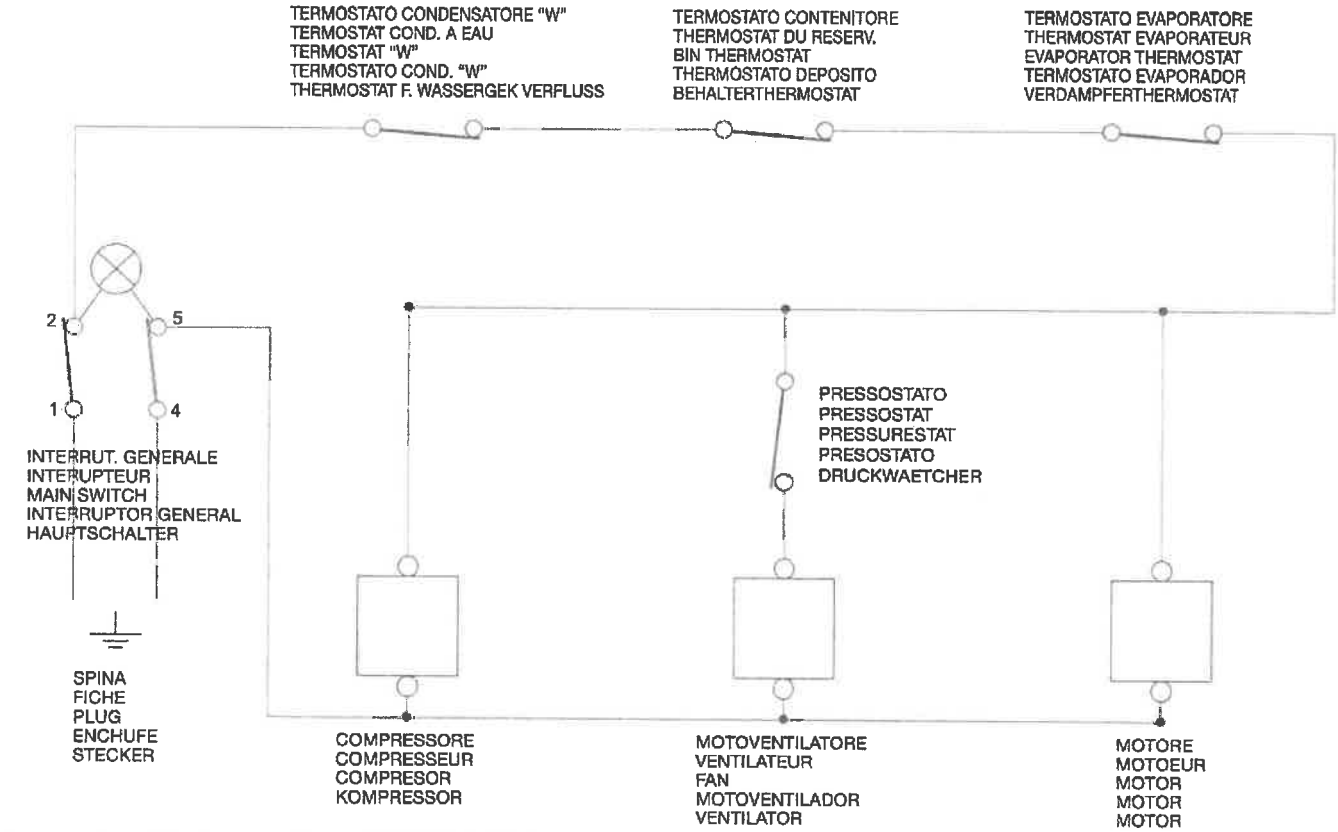

BL	BLU	BLU	BLUE	AZUL	BLAU
M	MARRONE	MARRON	BROWN	MARRON	BRAUN
N	NERO	NOIR	BLACK	NEGRO	SCHWARZ
B	BIANCO	BLANC	WHITE	BLANCO	WEISS
GR	GRIGIO	GRIS	GREY	GRIS	GRAU
R	ROSSO	ROUGE	RED	ROJO	ROT
GV	GIALLO-VERDE	JAUNE-VERT	YELLOW-GREEN	AMAR.-VERDE	GELB-GRUN

Mod. 45
35

ELETTRICO

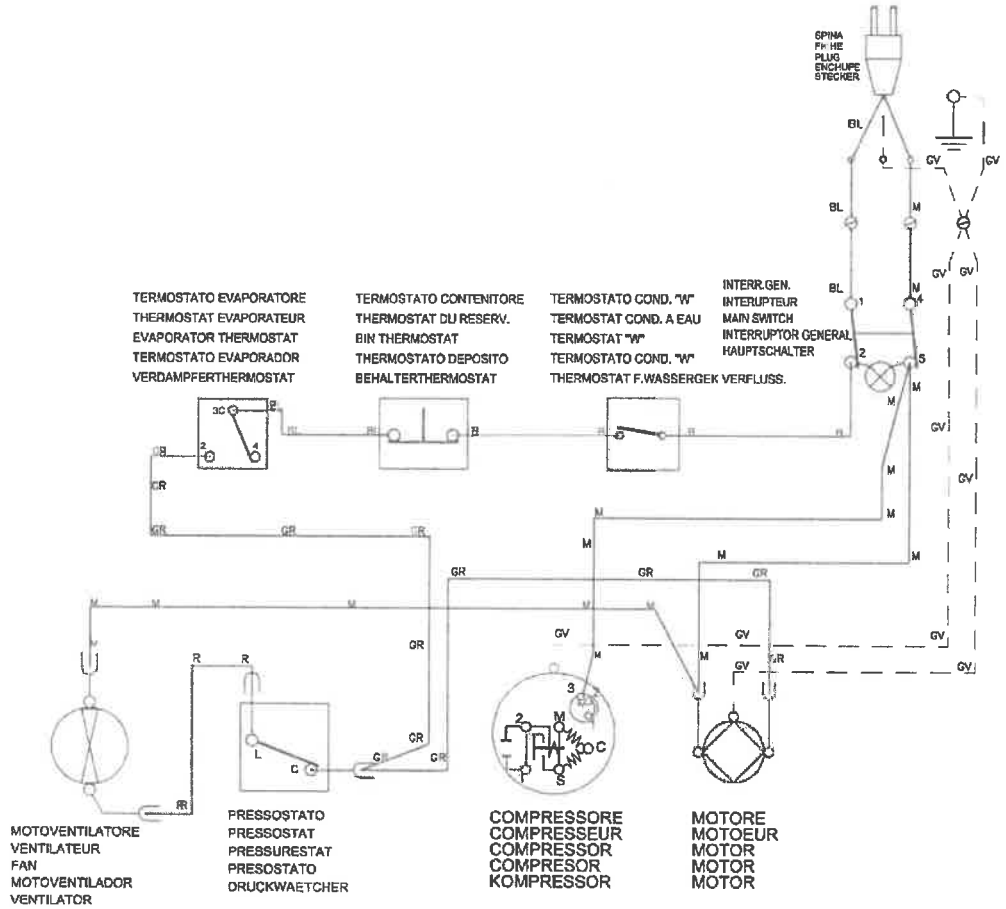

BL	BLU	BLU	BLUE	AZUL	BLAU
M	MARRONE	MARRON	BROWN	MARRON	BRAUN
N	NERO	NOIR	BLACK	NEGRO	SCHWARZ
B	BIANCO	BLANC	WHITE	BLANCO	WEISS
GR	GRIGIO	GRIS	GREY	GRIS	GRAU
R	ROSSO	ROUGE	RED	ROJO	ROT
GV	GIALLO-VERDE	JAUNE-VERT	YELLOW-GREEN	AMAR.-VERDE	GELB-GRUN

Mod. 85 – 145 – 185
75 – 125 – 165

FUNZIONALE

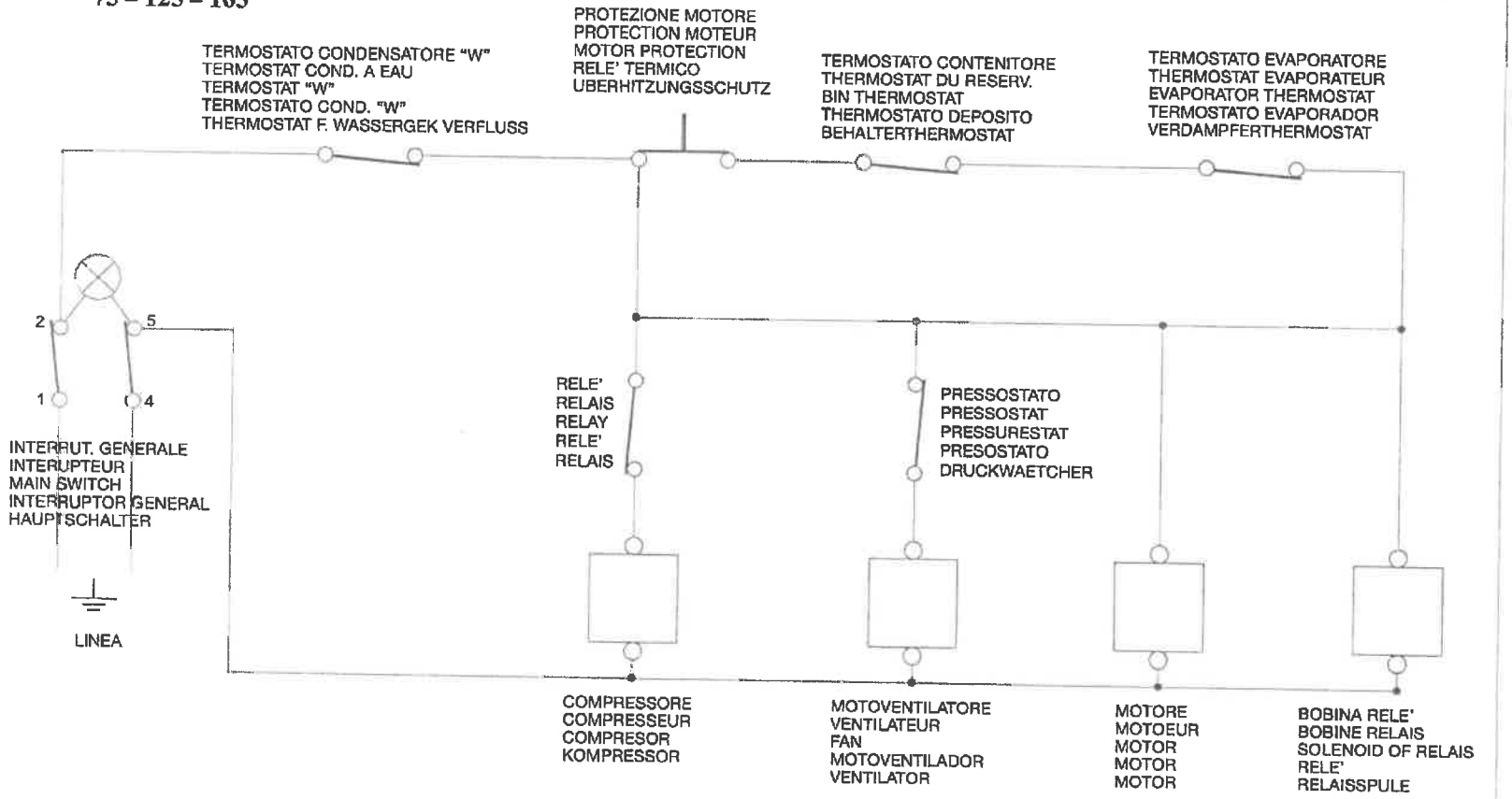

BL	BLU	BLU	BLUE	AZUL	BLAU
M	MARRONE	MARRON	BROWN	MARRON	BRAUN
N	NERO	NOIR	BLACK	NEGRO	SCHWARZ
B	BIANCO	BLANC	WHITE	BLANCO	WEISS
GR	GRIGIO	GRIS	GREY	GRIS	GRAU
R	ROSSO	ROUGE	RED	ROJO	ROT
GV	GIALLO-VERDE	JAUNE-VERT	YELLOW-GREEN	AMAR.-VERDE	GELB-GRUN

Mod. 85 – 145 – 185
75 – 125 – 165

ELETTRICO

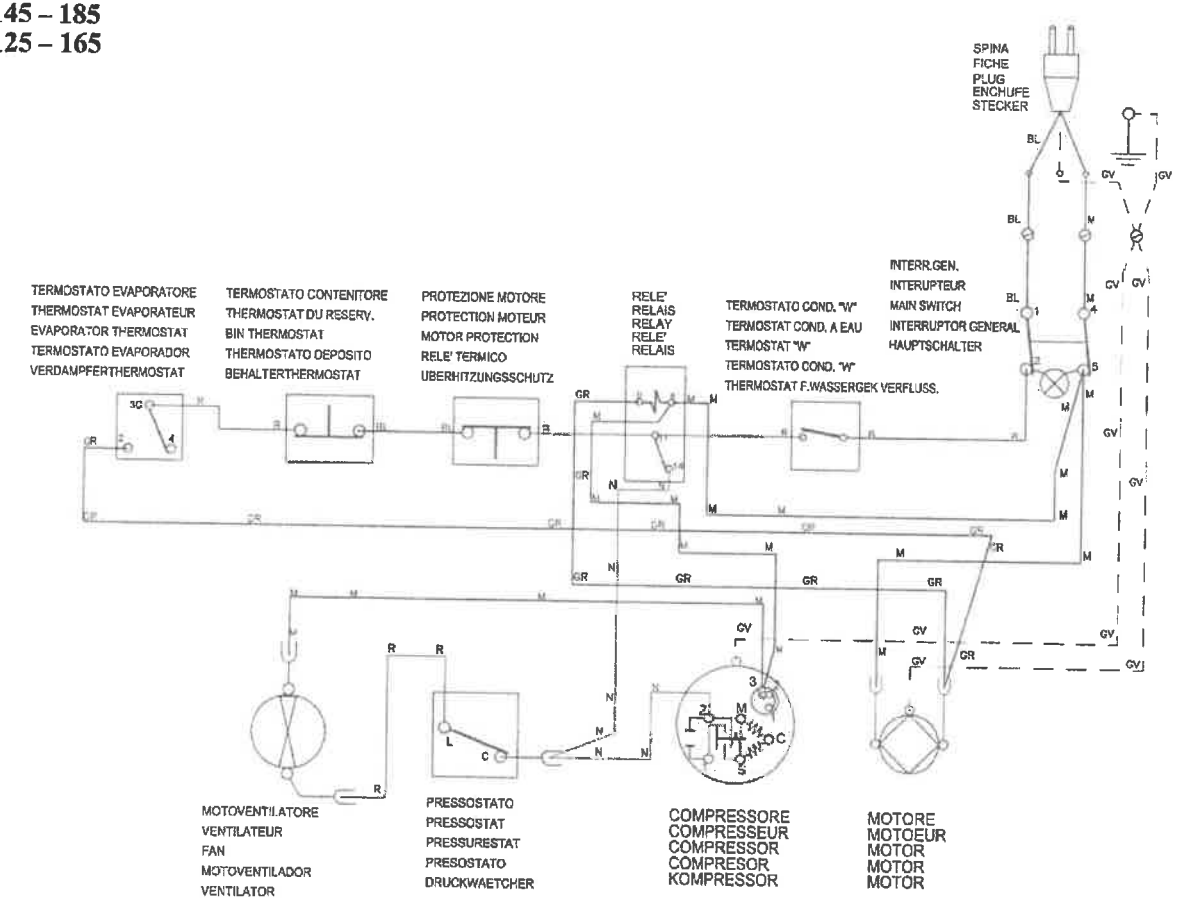

BL	BLU	BLU	BLUE	AZUL	BLAU
M	MARRONE	MARRON	BROWN	MARRON	BRAUN
N	NERO	NOIR	BLACK	NEGRO	SCHWARZ
B	BIANCO	BLANC	WHITE	BLANCO	WEISS
GR	GRIGIO	GRIS	GREY	GRIS	GRAU
R	ROSSO	ROUGE	RED	ROJO	ROT
GV	GIALLO-VERDE	JAUNE-VERT	YELLOW-GREEN	AMAR.-VERDE	GELB-GRUN

CE

DECLARATION OF CONFORMITY
DICHIARAZIONE DI CONFORMITA'

We declare under our responsibility that the product:
dichiariamo sotto la nostra responsabilità che il prodotto:

Product: ice-maker
Prodotto: fabbricatore di ghiaccio

to which this declaration relates is in conformity with the following standards or other normative document(s):
al quale questa dichiarazione si riferisce, è conforme alle seguenti norme:

- Safety of machinery Basic concepts, general principles for design – Basic terminology, methodology-ISO 12100-1 (2003).
- Sicurezza del macchinario, Concetti fondamentali, principi generali di progettazione - terminologia, metodologia di base EN ISO 12100-1 (2003).
- Safety of machinery – Basic concepts, general principles for design – Technical principles – ISO 12100 – 2 (2003).
- Sicurezza del macchinario - specifiche e principi tecnici EN ISO 12100 – 2 (2003).
- Safety of household and electrical appliances – General requirements EN60335-1 (2002) + A1/A11 (2004), A12 (2006) + A2 (2006).
- Sicurezza degli apparecchi elettrici d'uso domestico e similare - Norme generali EN 60335-1 (2002) + A1/A11 (2004), A12 (2006) + A2 (2006).
- Household and similar electrical appliances – Particular requirements for commercial dispensing appliances and vending machines – EN60335-2-75 (2003) + A1 (2005) + A11 (2006).
- Sicurezza degli apparecchi elettrici d'uso domestico e similare – Norme particolari per distributori commerciali e apparecchi automatici per la vendita – EN60335-2-75 (2003) + A1 (2005) + A11 (2006).
- Household and similar electrical appliances – Particular requirements for refrigerating appliances, ice-cream appliances and ice-makers – EN 60335-2-24 (2003) + A11 (2004) + A1 (2005) + A2 (2007).
- Sicurezza degli apparecchi elettrici d'uso domestico e similare – Norme particolari per frigoriferi, congelatori e produttori di ghiaccio – EN60335-2-24 (2003) + A11 (2004) + A1 (2005) + A2 (2007).
- Household and similar electrical appliances – Electromagnetic fields – Methods for evaluation and measurements EN50366 (2003) + A1 (2006).
- Sicurezza degli apparecchi elettrici d'uso domestico e similare – Campi elettromagnetici – Metodi per la valutazione e la misura EN50366(2003) + A1 (2006).
- Limits and methods of measurement of radio disturbance characteristics of electrical motor-operated and thermal appliances for households and similar purposes, electric tools and similar electric apparatus – EN55014-1 (2000) + A1 (2001) + A2 (2002).
- Limiti e metodi di misura delle caratteristiche di radiodisturbo degli apparecchi elettrodomestici e similari a motore o termici, degli utensili e degli apparecchi elettrici similari. EN55014 – 1 (2000) + A1 (2001) + A2 (2002).
- Limits for harmonic current emissions (equipment input current 16A per phase) – EN61000-3-2(2000) + A2 (2005).
- Limiti per le emissioni di corrente armonica (apparecchiature con corrente di ingresso 16A per fase) – EN61000-3-2 (2000) + A2 (2005).
- Limitation of voltage fluctuations and flicker in public low-voltage supply systems for equipment with rated current 75A and subjected to conditional connection EN61000-3-11 (2000).
- Limitazione delle fluttuazioni di tensione e dei flicker in sistemi di alimentazione a bassa tensione per apparecchiature con corrente nominale 75A e soggetto a condizioni di connessione. EN 61000-3-11 (2000).
- Immunity requirements for household appliances, tools and similar apparatus. Product family standard EN 55014-2 (1997) + A1 (2001).
- Requisiti di immunità per apparecchi elettrodomestici, utensili e degli apparecchi elettrici similari EN 55014-2(1997) + A1 (2001).

following the provisions of the Directives: EC 2006/42, EC 2006/95, EC 2004/108.
in base a quanto previsto dalle Direttive: 2006/42/CEE, 2006/95/CEE, 2004/108/CEE.

THE PRODUCER
IL PRODUTTORE

Mod. 200 – 300 – 450 – 600
180 – 250 – 400 – 500

FUNZIOANALE

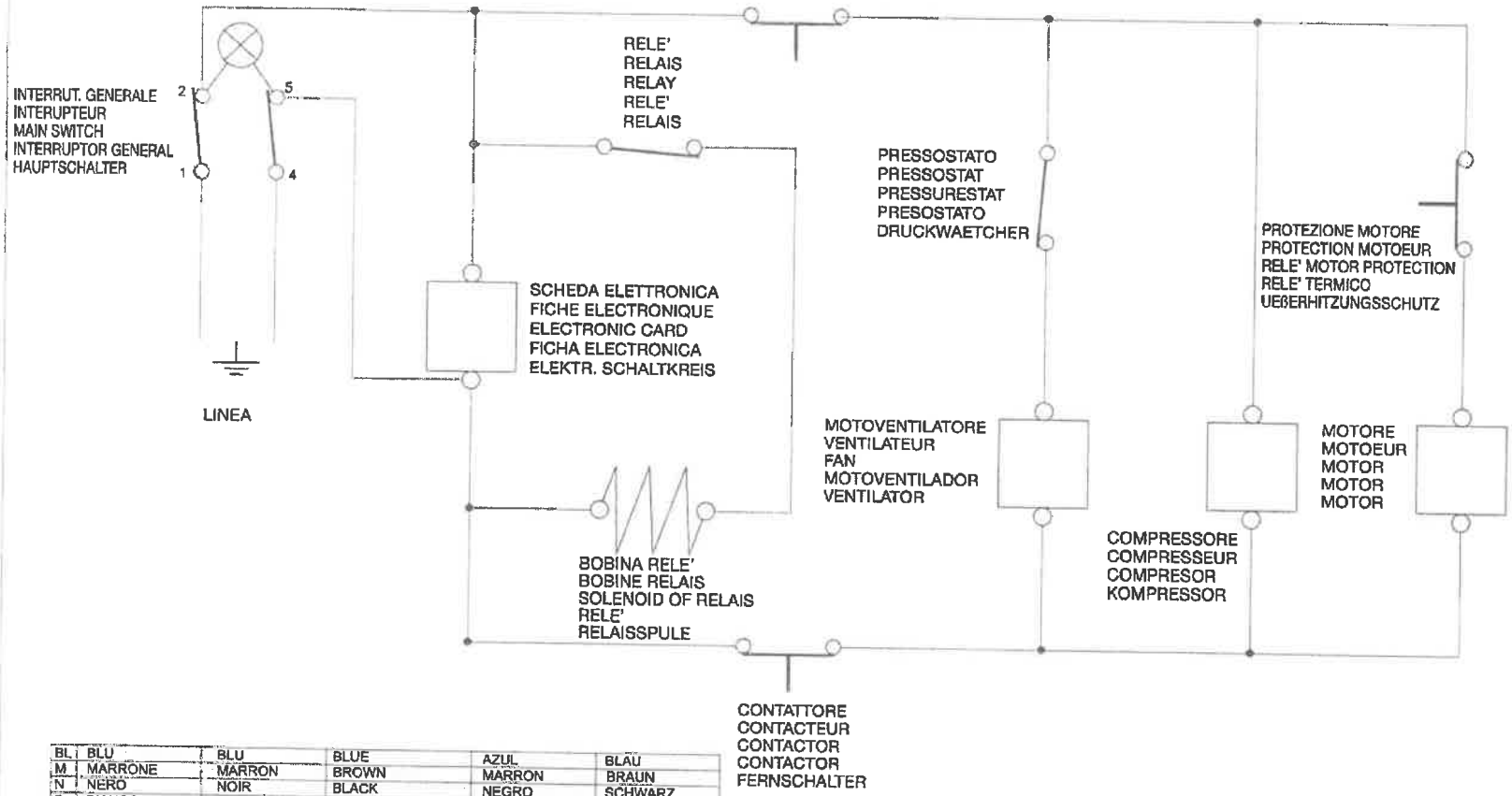

BL	BLU	BLU	BLUE	AZUL	BLAU
M	MARRONE	MARRON	BROWN	MARRON	BRAUN
N	NERO	NOIR	BLACK	NEGRO	SCHWARZ
B	BIANCO	BLANC	WHITE	BLANCO	WEISS
GR	GRIGIO	GRIS	GREY	GRIS	GRAU
R	ROSSO	ROUGE	RED	ROJO	ROT
GV	GIALLO-VERDE	JAUNE-VERT	YELLOW-GREEN	AMAR.-VERDE	GELB-GRUN

Mod. 200 – 300 – 450 – 600
180 – 250 – 400 – 500

ELETTRICO

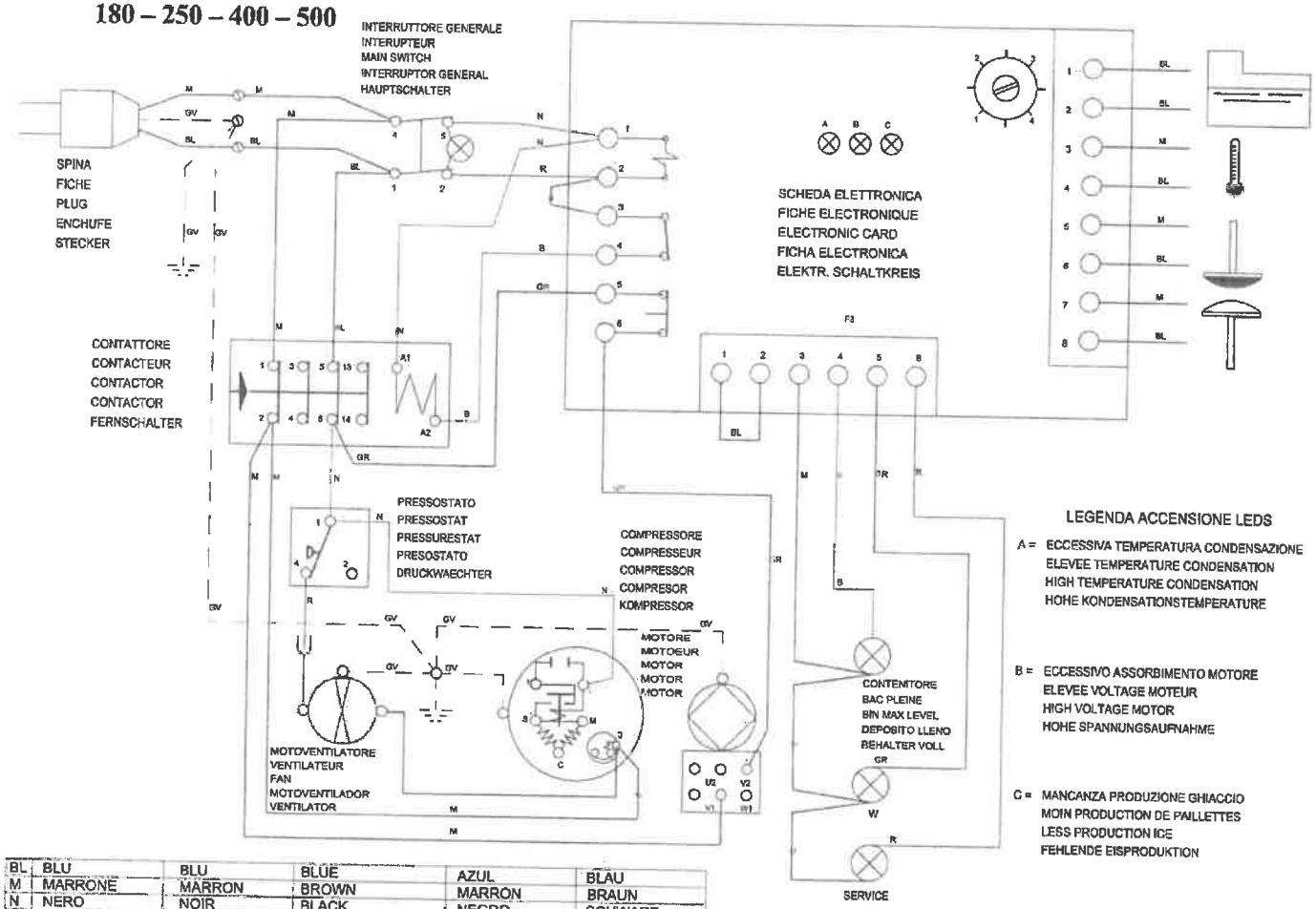

SONDE LIVELLO ACQUA
DETECTEURS NIVEAU EAU
SENSORS WATER LEVEL
FUHLER WASSERNIVEAU

SONDE TEMPERATURA CONDENSAZIONE
DETECTEURS TEMPERATURE
SENSORS TEMPERATURE CONDENSATION
FUHLER KONDENSATIONSTEMPERATUR

TRAS. INFRAROSSI CONTROLLO CONTEN.
DETECTEURS NIVEAU PAILLETTES
SENSOR LEVEL ICE TRANSMITTER
FUHLER EISNIVEAU SENDER

RIC. INFRAROSSI CONTROLLO CONTEN.
DETECTEURS NIVEAU PAILLETTES
SENSOR LEVEL ICE RECEIVER
FUHLER EISNIVEAU EMPFANGER

LEGENDA ACCENSIONE LEDS

A = ECCESSIVA TEMPERATURA CONDENSAZIONE
ELEVEE TEMPERATURE CONDENSATION
HIGH TEMPERATURE CONDENSATION
HOHE KONDENSATIONSTEMPERATURE

B = ECCESSIVO ASSORBIMENTO MOTORE
ELEVEE VOLTAGE MOTEUR
HIGH VOLTAGE MOTOR
HOHE SPANNUNGSAURNAHME

C = MANCANZA PRODUZIONE GHIACCIO
MOIN PRODUCTION DE PAILLETTES
LESS PRODUCTION ICE
FEHLENDE EISPRODUKTION

BL	BLU	BLU	BLUE	AZUL	BLAU
M	MARRONE	MARRON	BROWN	MARRON	BRAUN
N	NERO	NOIR	BLACK	NEGRO	SCHWARZ
B	BIANCO	BLANC	WHITE	BLANCO	WEISS
GR	GRIGIO	GRIS	GREY	GRIS	GRAU
R	ROSSO	ROUGE	RED	ROJO	ROT
GV	GIALLO-VERDE	JAUNE-VERT	YELLOW-GREEN	AMAR.-VERDE	GELB-GRUN

Mod. 950 – 1200 – 1750x2 – 2500x2
800 – 1000 – 1600x2

FUNZIONALE

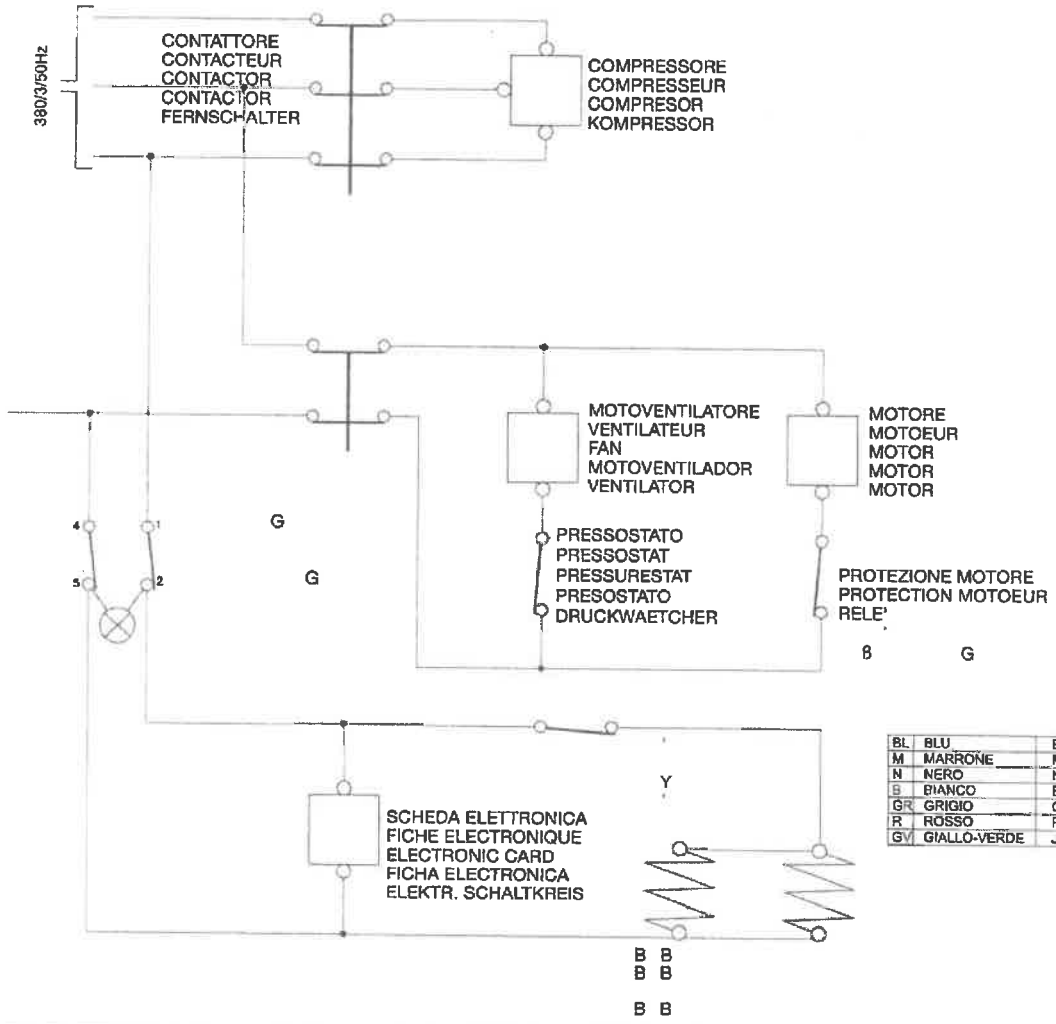

BL	BLU	BLU	BLUE	AZUL	BLAU
M	MARRONE	MARRON	BROWN	MARRON	BRAUN
N	NERO	NOIR	BLACK	NEGRO	SCHWARZ
B	BIANCO	BLANC	WHITE	BLANCO	WEISS
GR	GRIGIO	GRIS	GREY	GRIS	GRAU
R	ROSSO	ROUGE	RED	ROJO	ROT
GV	GIALLO-VERDE	JAUNE-VERT	YELLOW-GREEN	AMAR.-VERDE	GELB-GRUN

Mod. 950 – 1200 – 1750x2 – 2500x2
800 – 1000 – 1600x2

ELETTRICO

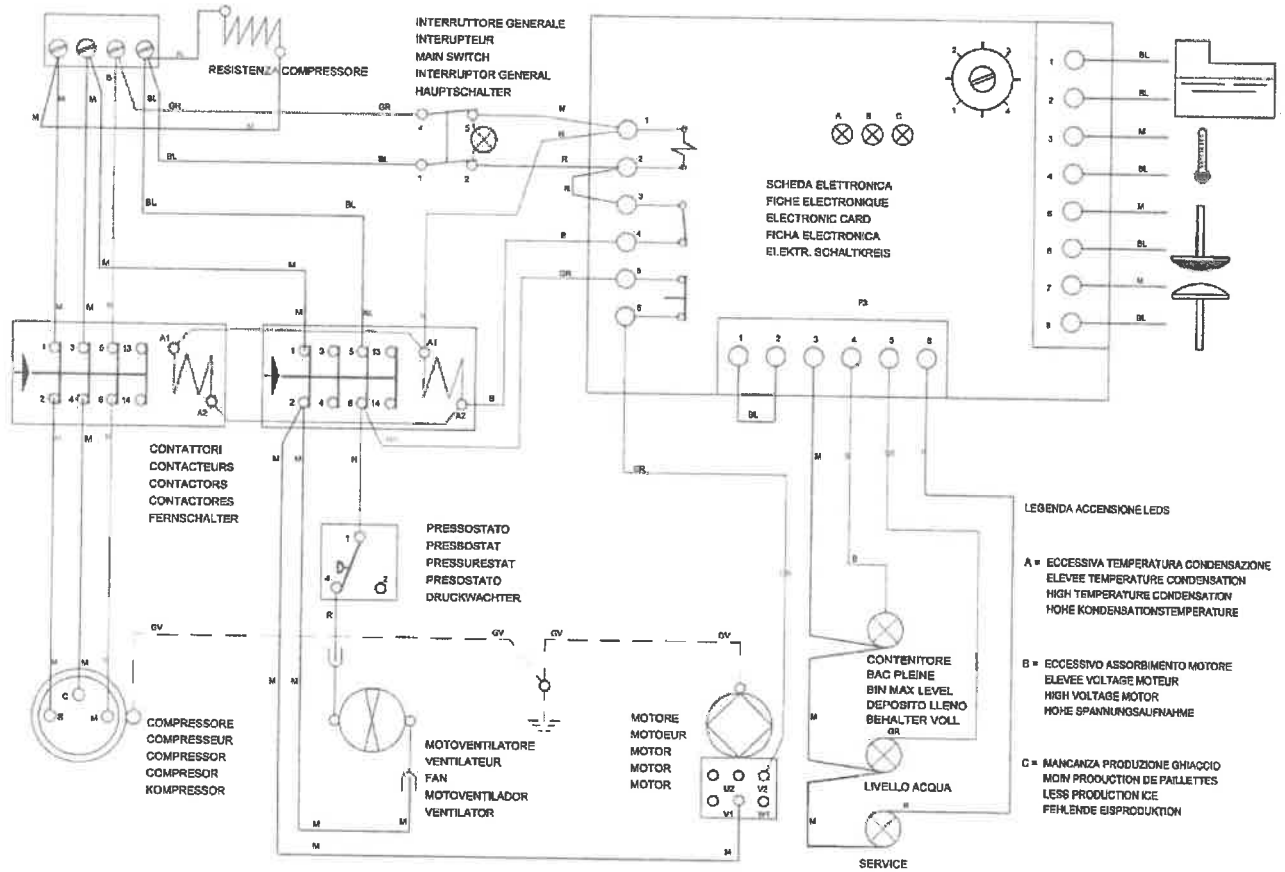

BL	BLU	BLU	BLUE	AZUL	BLAU
M	MARRONE	MARRON	BROWN	MARRON	BRAUN
N	NERO	NOIR	BLACK	NEGRO	SCHWARZ
B	BIANCO	BLANC	WHITE	BLANCO	WEISS
GR	GRIGIO	GRIS	GREY	GRIS	GRAU
R	ROSSO	ROUGE	RED	ROJO	ROT
GV	GIALLO-VERDE	JAUNE-VERT	YELLOW-GREEN	AMAR.-VERDE	GELB-GRUN