Motic®

MORE THAN MICROSCOPY

www.moticeurope.com/resources

Protect yourself.
Take care.
Stay healthy.

SUPPORT

SAFETY RECOMMENDATION GUIDE

HOW TO ENSURE A CLEAN SCHOOL MICROSCOPE

INTRODUCTION

You certainly ask yourself what to do as a school or teaching institute during this extraordinary situation of Corona.

How to ensure the health of pupils during practice lessons with microscopes?

As a manufacturer of microscopes we do understand. We have prepared a small guidance on how to gain the attention of pupils for a common responsible conduct before, during and after the lesson.

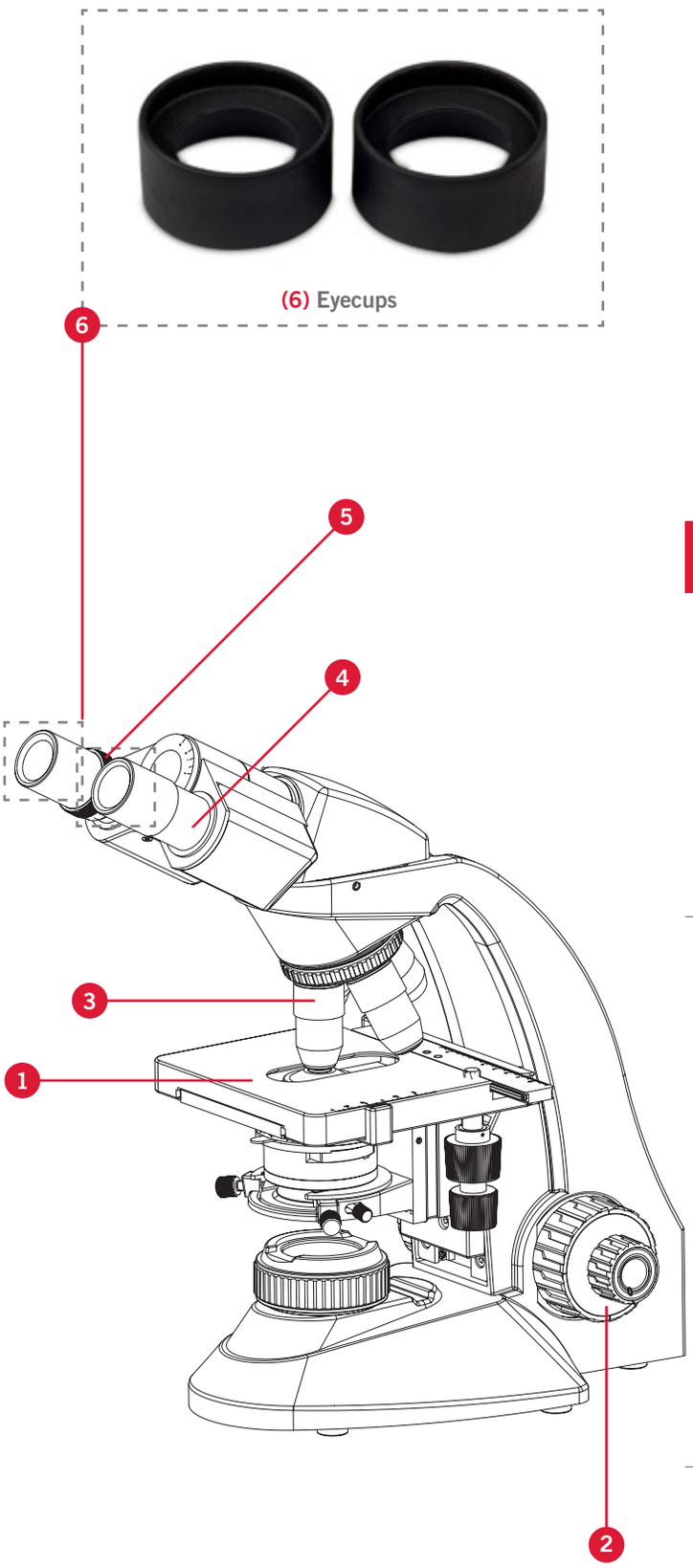

WHICH COMPONENTS OF A MICROSCOPE MAY CARRY A RISK OF CONTAMINATION?

The press tells us nothing finalized about the risk of contamination with the COVID-19 virus by touching the surfaces of our surrounding. Research institutes agree that contagion is based on contact with droplets of infected persons. All parts can be touched with fingers, but it's mainly:

(1) **The stage and the object carrier** (if existing) when placing/changing the slide

(2) **The focus knobs**

(3) **The objectives** when changing the magnification

(4) **The eyepiece tube(s)** when adjusting the interpupillary distance

(5) **The eyepieces** when doing the diopter adjustment

(6) **The eyecups** when working

OUR RECOMMENDATIONS TO MINIMALIZE THE RISK OF CONTAMINATION

To be on the safe side, we recommend to disinfect the microscopes at the beginning and at the end of the lessons.

- **A LIQUID DISINFECTANT**
  to treat the stage and the object carrier
- **A SPRAY BOTTLE WITH DISINFECTANT**
  to treat the rough focus knobs
- **SMALL PIECES OF PURE COTTON**
  (an old T-shirt without imprint will do fine) to treat larger surfaces; cotton swabs for small areas

THE TREATMENT (PUPILS ARE INVITED)

- Stage and object carrier got a smooth surface; easy to apply the liquid disinfectant with a piece of cloth.
- The rough focus knobs need a spray application; dry them with some cotton piece.
- The eyepiece tube(s) do have a metal or plastic smooth surface; apply the liquid disinfectant with a piece of cloth.
- The eyepieces (only external surface) can be treated with disinfectant. As this mostly contains alcohol, the removal of eyebrow lipids is included.
- Rinse the eyecups separately with disinfectant and dry them (additional recommendation below).

Please note that eyecups are manufactured from very different materials. To buy additional numbers of eyecups so that each single pupil has always one disinfected pair available. Contact us.

FOR A GENERAL CLEANING OF SMALL OPTICAL SURFACES (OBJECTIVES, EYEPIECES) YOU NEED:

- **AIR BLOWER**
- **BRUSH**
- **COTTON SWABS**
- **ETHYL ALCOHOL (70%)**

The cleaning for eyepiece is the same as with objectives. We recommend to remove the eyecups from the eyepiece(s) and first, use an air blower and a brush to expel specks of dust, then use the cotton swab with ethyl alcohol to clean the glass surface. The eyecups can be cleaned with ethyl alcohol to or just a simple water bath with detergent.

All inner surfaces of the optical elements are strictly taboo! Do not disassemble any part of your microscope for cleaning purposes. Keep the objectives within the nosepiece. Start with same procedure like above, followed by a piece of cotton is moistened (not wet!) with alcohol. Softly (!) push the cotton swab onto the front lens and rotate it without any pressure. Check the cotton; if you see any dirt, please repeat this procedure with a fresh piece of cotton.

A general cleaning is simple to realize with offered cleaning kits available from Motic **(A)**. Leave the instrument exactly like you want to meet it again. Still questions? Just write us.

A

EYECUPS FOR MODELS BY SERIES

CLASSIC/EDUCATION/	*Code 1101005100101*
RED/SILVER LINE	*Code 1101000300392*
BA SERIES	*Code 1101001400251*
PANTHERA	*Code 1101001403581*

CLEANING KITS

BASIC	*Code CLEANBASIC*
PROFESSIONAL	*Code 1101001300111*

Canada I China I Germany I Spain I USA

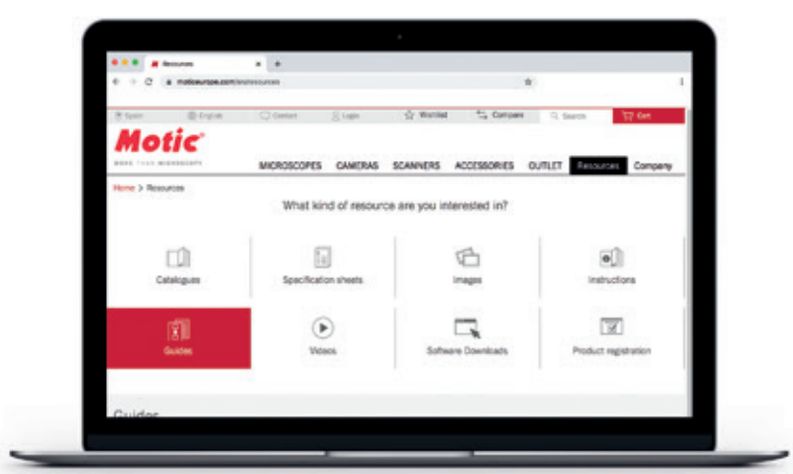

If you want to know more about our products, visit our **Resources Zone** at

www.moticeurope.com/resources

*CCIS® is a trademark of Motic Incorporation Ltd. Motic Incorporation Limited Copyright © 2002-2020. All Rights Reserved.

Design Change: The manufacturer reserves the right to make changes in instrument design in accordance with scientific and mechanical progress, without notice and without obligation.

Designed in Barcelona (Spain) August 2020